Sunny Central 720-CP-10

Circuit diagram

SC-720-CP-10-CEN110910 | 98-50300410 | Version 1.0

Table of contents

Object identifier	DCC/Page sequence number	Page description	Additional field	Date
SC-720-CP-10	&EAA/A1	Cover sheet		11.04.2011
SC-720-CP-10	&EAB/AB1	Table of contents : &EAA/A1 - &EFE/BE1		11.04.2011
SC-720-CP-10	&EAB/AB2	Table of contents : &EFE/BE2 - &EFS/E4		11.04.2011
SC-720-CP-10	&EAB/AB3	Table of contents : &EFS/E5 - &EFS/E16		11.04.2011
SC-720-CP-10	&EAB/AB4	Table of contents : &EFS/E17 - &EFS/M3		11.04.2011
SC-720-CP-10	&EAB/AB5	Table of contents : &EFS/M4 - &EFS/M15		11.04.2011
SC-720-CP-10	&EAB/AB6	Table of contents : &EFS/M16 - &EFS/M29		11.04.2011
SC-720-CP-10	&EAB/AB7	Table of contents : &EFS/M30 - &EFS/O2		11.04.2011
SC-720-CP-10	&EAB/AB8	Table of contents : &EFS/O3 - &EFS/O12		11.04.2011
SC-720-CP-10	&EAB/AB9	Table of contents : &EFS/R1 - &EFS/R10		11.04.2011
SC-720-CP-10	&EAB/AB10	Table of contents : &EFS/R11 - &EPD/YD5		11.04.2011
SC-720-CP-10	&EAB/AB11	Table of contents : &EPD/YD6 - &EPD/YD27		11.04.2011
SC-720-CP-10	&EDB/AC1	Attribute system		07.04.2011
SC-720-CP-10	&EDB/AC2	Technical data		07.04.2011
SC-720-CP-10	&EDB/AF1	Function structure option code		11.04.2011
SC-720-CP-10	&EDB/AF2	Function structure option code		11.04.2011
SC-720-CP-10	&ETL/AU1	switch cabinet view		07.04.2011
SC-720-CP-10	&ETL/AU2	setting AC Power circuit breaker		07.04.2011
SC-720-CP-10	&EFA/BA1	Wiring diagram overview		07.04.2011
SC-720-CP-10	&EFA/BA2	Wiring diagram overview Control		11.04.2011
SC-720-CP-10	&EFE/BE1	Grounding plan Power supply	Standard	07.04.2011

Table of contents

Object identifier	DCC/Page sequence number	Page description	Additional field	Date
SC-720-CP-10	&EFE/BE2	Grounding plan Interface Cabinet	Standard Option 4_1 Option 4_2 Option 4_3 Option 4_4 Option 4_5 Option 4_6	07.04.2011
SC-720-CP-10	&EFE/BE3	Grounding plan Inverter Cabinet	Standard	07.04.2011
SC-720-CP-10	&EFS/D1	AC Grid feeding	Standard	07.04.2011
SC-720-CP-10	&EFS/D2	AC Main switch	Option 10_0 Option 10_1 Option 10_2 Option 10_3	07.04.2011
SC-720-CP-10	&EFS/D3	AC Low voltage	Standard	07.04.2011
SC-720-CP-10	&EFS/D4	AC Discharger	Standard	07.04.2011
SC-720-CP-10	&EFS/D5	AC Current measurement AC Grid contactor	Standard	07.04.2011
SC-720-CP-10	&EFS/D6	sine filter	Standard	07.04.2011
SC-720-CP-10	&EFS/D7	voltage measurement Grid side	Standard	07.04.2011
SC-720-CP-10	&EFS/D8	voltage measurement converter	Standard	07.04.2011
SC-720-CP-10	&EFS/E1	Inverter bridge	Standard	07.04.2011
SC-720-CP-10	&EFS/E2	DC Power supply Plus 2_0 / 2_1 / 2_2	Option 2_0 Option 2_1 Option 2_2	07.04.2011
SC-720-CP-10	&EFS/E3	DC Power supply Minus 2_0 / 2_1 / 2_2	Option 2_0 Option 2_1 Option 2_2	07.04.2011
SC-720-CP-10	&EFS/E4	DC Power supply 2_4	Option 2_4	07.04.2011

Table of contents

Object identifier	DCC/Page sequence number	Page description	Additional field	Date
SC-720-CP-10	&EFS/E5	DC Power supply Plus	Option 2_0 Option 2_1 Option 2_2 Option 2_4 Option 4_3 Option 4_4 Option 4_5 Option 5_0 Option 5_1 Option 5_2	07.04.2011
SC-720-CP-10	&EFS/E6	DC Power supply Minus	Option 2_0 Option 2_1 Option 2_2 Option 2_4 Option 4_1 option 4_2 Option 4_6 Option 5_0 Option 5_1 Option 5_2	07.04.2011
SC-720-CP-10	&EFS/E7	=2_0 fuses postiv and negativ and options 3_X		07.04.2011
SC-720-CP-10	&EFS/E8	=2_1_fuses positiv disconnentig blades negativ and options 3_X		07.04.2011
SC-720-CP-10	&EFS/E9	=2_2_fuses negativ disconnentig blades positiv and options 3_X		07.04.2011
SC-720-CP-10	&EFS/E14	DC Switch-disconnector	Standard	07.04.2011
SC-720-CP-10	&EFS/E15	Current measurement DC	Standard	07.04.2011
SC-720-CP-10	&EFS/E16	Voltage measurement DC	Standard	07.04.2011

Table of contents

Object identifier	DCC/Page sequence number	Page description	Additional field	Date
SC-720-CP-10	&EFS/E17	GFDI fuse monitoring	Option 4_0 Option 4_1 Option 4_3	07.04.2011
SC-720-CP-10	&EFS/E18	GFDI fuse monitoring Option 4_2 , 4_4	Standard Option 4_2 Option 4_4	07.04.2011
SC-720-CP-10	&EFS/E20	GFDI fuse monitoring	Option 4_2	07.04.2011
SC-720-CP-10	&EFS/E21	GFDI fuse monitoring	Option 4_4	07.04.2011
SC-720-CP-10	&EFS/E22	GFDI fuse monitoring Option 4_5 , 4_6	Option 4_5 Option 4_6	07.04.2011
SC-720-CP-10	&EFS/E23	Overvoltage protector DC	Standard	07.04.2011
SC-720-CP-10	&EFS/G1	External Control voltage AC	Standard	07.04.2011
SC-720-CP-10	&EFS/G2	Control voltage AC X200,X201,X202	Standard	07.04.2011
SC-720-CP-10	&EFS/G3	Control voltage AC X203,X204,X205	Standard Option 4_5 Option 4_6	07.04.2011
SC-720-CP-10	&EFS/G4	Control voltage AC X206	Standard Option 4_5 Option 4_6	07.04.2011
SC-720-CP-10	&EFS/H1	Control voltage DC X400,X402	Standard Option 4_5 Option 4_6	07.04.2011
SC-720-CP-10	&EFS/M1	Control Line contactor	Standard	07.04.2011
SC-720-CP-10	&EFS/M2	Control AC-Power circuit breaker	Option 10_0 Option 10_1 Option 10_2 Option 10_3	07.04.2011
SC-720-CP-10	&EFS/M3	Control DC Switch-disconnector	Standard	07.04.2011

Table of contents

Object identifier	DCC/Page sequence number	Page description	Additional field	Date
SC-720-CP-10	&EFS/M4	Control Heating, supply contactor interface Service 230V	Standard	07.04.2011
SC-720-CP-10	&EFS/M5	Control switch cabinet fan	Standard	07.04.2011
SC-720-CP-10	&EFS/M6	Control Inverter bridge Fan	Standard	11.04.2011
SC-720-CP-10	&EFS/M7	Control digital inputs X12 , X13	Standard	07.04.2011
SC-720-CP-10	&EFS/M8	Control General SC-20CONT.GR-S1	Standard	07.04.2011
SC-720-CP-10	&EFS/M9	Control General SC-20CONT.GR-S1	Standard	07.04.2011
SC-720-CP-10	&EFS/M10	Control General SC-20CONT.GR-S1	Standard Option 4_0 Option 4_1 Option 4_2 Option 4_3 Option4_4 Option 4_5 Option 4_6 Option 5_0 Option 5_1 Option 5_2	07.04.2011
SC-720-CP-10	&EFS/M11	Control General SC-20CONT.GR-S1	Standard	07.04.2011
SC-720-CP-10	&EFS/M13	Control Indicator light	Standard Option 6_1	07.04.2011
SC-720-CP-10	&EFS/M14	Control General SC20CAIO.GR1	Standard	07.04.2011
SC-720-CP-10	&EFS/M15	Control General SC20CAIO.GR1	Standard	11.04.2011

Table of contents

Object identifier	DCC/Page sequence number	Page description	Additional field	Date
SC-720-CP-10	&EFS/M16	Control General SC20CAIO.GR1	Standard Option 14_4	07.04.2011
SC-720-CP-10	&EFS/M17	Control General SC20CAIO.GR1	Standard	07.04.2011
SC-720-CP-10	&EFS/M18	grid voltage monitoring testing terminal strip	Standard	07.04.2011
SC-720-CP-10	&EFS/M19	Control Master/Slave	Standard	07.04.2011
SC-720-CP-10	&EFS/M20	Control Inverter bridge	Standard	07.04.2011
SC-720-CP-10	&EFS/M21	Control Insulation monitoring	Standard Option 5_0 Option 5_1 Option 5_2	07.04.2011
SC-720-CP-10	&EFS/M22	Control Insulation monitoring Failure messages	Standard Option 5_0 Option 5_1 Option 5_2	07.04.2011
SC-720-CP-10	&EFS/M23	Control Insulation monitoring	Option 5_1	07.04.2011
SC-720-CP-10	&EFS/M24	Control Insulation monitoring	Option 5_2	07.04.2011
SC-720-CP-10	&EFS/M25	Control Softgrounding 4_5	Standard Option 4_5	07.04.2011
SC-720-CP-10	&EFS/M26	Control Softgrounding 4_6	Standard Option 4_6	07.04.2011
SC-720-CP-10	&EFS/M28	Control Insulation monitoring	Standard	11.04.2011
SC-720-CP-10	&EFS/M29	message and Signals External Remote Deactivation Unit , Input Protection transformer	Standard	07.04.2011

Table of contents

Object identifier	DCC/Page sequence number	Page description	Additional field	Date
SC-720-CP-10	&EFS/M30	External Predefined setpoint Reactive power , Effective power	Standard	07.04.2011
SC-720-CP-10	&EFS/M31	External Warning Insulation monitoring Immediate-Stopp	Standard Option 14_4	07.04.2011
SC-720-CP-10	&EFS/N1	SC20CONT.GR-S1 Power supply 24V DC X1 Master 1 and X2 Master 2	Standard	07.04.2011
SC-720-CP-10	&EFS/N2	SC20CONT.GR-S1 Voltage L1, L2 and L3 Grid side X55	Standard	07.04.2011
SC-720-CP-10	&EFS/N3	SC20CONT.GR-S1 Voltage L1, L2 and L3 Grid side X56	Standard	07.04.2011
SC-720-CP-10	&EFS/N4	SC20CONT.GR-S1 Voltage L1, L2 and L3 converter X57	Standard	07.04.2011
SC-720-CP-10	&EFS/N5	SC20CONT.GR-S1 Voltage measurement PV X58 and Auxiliary circuit X59	Standard	07.04.2011
SC-720-CP-10	&EFS/N6	SC20CONT.GR-S1 Measurement AC-current L1 X50 Measurement AC current L2 X51	Standard	07.04.2011
SC-720-CP-10	&EFS/N7	SC20CONT.GR-S1 Measurement AC-current L3 X52 Measurement DC-current PV X53	Standard	07.04.2011
SC-720-CP-10	&EFS/O1	SC20CONT.GR-S1 overview digital one-phase / Power supply		07.04.2011
SC-720-CP-10	&EFS/O2	SC20CONT.GR-S1 overview digital inputs		07.04.2011

Table of contents

Object identifier	DCC/Page sequence number	Page description	Additional field	Date
SC-720-CP-10	&EFS/O3	SC20CONT.GR-S1 overview digital inputs digital outputs		07.04.2011
SC-720-CP-10	&EFS/O4	SC20CONT.GR-S1 overview digital outputs Analog inputs		07.04.2011
SC-720-CP-10	&EFS/O5	SC20CONT.GR-S1 overview Analog inputs CAN Bus Slave 1		07.04.2011
SC-720-CP-10	&EFS/O6	SC20CONT.GR-S1 overview CAN Bus Slave 2 control IGBT 1		07.04.2011
SC-720-CP-10	&EFS/O7	SC20CONT.GR-S1 overview Speed Wire 1 RJ45 Speed Wire 2 RJ45		07.04.2011
SC-720-CP-10	&EFS/O8	SC20CONT.GR-S1 overview control IGBT 2 control IGBT 3		07.04.2011
SC-720-CP-10	&EFS/O9	SC20CAIO.GR1 overview digital inputs		07.04.2011
SC-720-CP-10	&EFS/O10	SC20CAIO.GR1 overview digital inputs		07.04.2011
SC-720-CP-10	&EFS/O11	SC20CAIO.GR1 overview digital inputs digital outputs		07.04.2011
SC-720-CP-10	&EFS/O12	SC20CAIO.GR1 overview Analog inputs inputs CAN Bus coding		07.04.2011

Table of contents

Object identifier	DCC/Page sequence number	Page description	Additional field	Date
SC-720-CP-10	&EFS/R1	Communication Power supply X407	Standard Option 6_0 Option 6_1 Option 7_0 Option 7_1	07.04.2011
SC-720-CP-10	&EFS/R2	Communication Power supply X420	Standard Option 11_1 Option 11_2	07.04.2011
SC-720-CP-10	&EFS/R3	Communication Sunny Webbox	Standard Option 6_0 Option 6_1	07.04.2011
SC-720-CP-10	&EFS/R4	Communication 6_0 Display	Option 6_0 Option 7_0 Option 7_1	07.04.2011
SC-720-CP-10	&EFS/R5	Communication 6_1 Ethernet Switch	Option 6_1 Option 7_0 Option 7_1	07.04.2011
SC-720-CP-10	&EFS/R6	Communication Customer's connection	Standard Option 7_0 Option 7_1	07.04.2011
SC-720-CP-10	&EFS/R7	Communication Sunny Webbox	Option 11_0 Option 11_1 Option 11_2	07.04.2011
SC-720-CP-10	&EFS/R8	String current monitoring	Standard Option 11_0 Option 11_1 Option 11_2	07.04.2011
SC-720-CP-10	&EFS/R9	String current monitoring Power supply Hub	Standard Option 11_1 Option 11_2	07.04.2011
SC-720-CP-10	&EFS/R10	Communication Sunny Central String Monitor Controller	Option 11_1	07.04.2011

Table of contents

Object identifier	DCC/Page sequence number	Page description	Additional field	Date
SC-720-CP-10	&EFS/R11	SMU-distribution box SMU8-HUB1	Option 11_1	07.04.2011
SC-720-CP-10	&EFS/R12	Communication Sunny Central String Monitor Controller	Option 11_2	07.04.2011
SC-720-CP-10	&EFS/R13	SMU-distribution box SMU8-HUB1	Option 11_2	07.04.2011
SC-720-CP-10	&EFS/R14	SMU-distribution box SMU8-HUB1	Option 11_2	07.04.2011
SC-720-CP-10	&EFS/R15	String current monitoring External	Standard Option 11_1 Option 11_2	07.04.2011
SC-720-CP-10	&EFS/R16	String current monitoring External	Standard Option 11_1 Option 11_2	07.04.2011
SC-720-CP-10	&EFS/R17	String current monitoring External	Standard	07.04.2011
SC-720-CP-10	&EFS/R18	Communication LWL-Input	Option 7_0 Option 7_1	07.04.2011
SC-720-CP-10	&EMA/WB1	Terminal strip overview : =2_4-X19 - =SC-X110		11.04.2011
SC-720-CP-10	&EMA/WB2	Terminal strip overview : =4_0-X30 - =SC-X726		11.04.2011
SC-720-CP-10	&EMA/WC1	Connector overview : =6_0-X500 - =SC-X752		11.04.2011
SC-720-CP-10	&EMA/WC2	Connector overview : =SC-X73 - =SC-X81		11.04.2011
SC-720-CP-10	&EMA/WC3	Connector overview : =4_2-F2-X1 - =SC-X600		11.04.2011
SC-720-CP-10	&EMA/WC4	Connector overview : =SC-X710 - =SC-X712		11.04.2011
SC-720-CP-10	&EPD/YD1	Device tag list		11.04.2011
SC-720-CP-10	&EPD/YD2	Device tag list		11.04.2011
SC-720-CP-10	&EPD/YD3	Device tag list		11.04.2011
SC-720-CP-10	&EPD/YD4	Device tag list		11.04.2011
SC-720-CP-10	&EPD/YD5	Device tag list		11.04.2011

Table of contents

Object identifier	DCC/Page sequence number	Page description	Additional field	Date
SC-720-CP-10	&EPD/YD6	Device tag list		11.04.2011
SC-720-CP-10	&EPD/YD7	Device tag list		11.04.2011
SC-720-CP-10	&EPD/YD8	Device tag list		11.04.2011
SC-720-CP-10	&EPD/YD9	Device tag list		11.04.2011
SC-720-CP-10	&EPD/YD10	Device tag list		11.04.2011
SC-720-CP-10	&EPD/YD11	Device tag list		11.04.2011
SC-720-CP-10	&EPD/YD12	Device tag list		11.04.2011
SC-720-CP-10	&EPD/YD13	Device tag list		11.04.2011
SC-720-CP-10	&EPD/YD14	Device tag list		11.04.2011
SC-720-CP-10	&EPD/YD15	Device tag list		11.04.2011
SC-720-CP-10	&EPD/YD16	Device tag list		11.04.2011
SC-720-CP-10	&EPD/YD17	Device tag list		11.04.2011
SC-720-CP-10	&EPD/YD18	Device tag list		11.04.2011
SC-720-CP-10	&EPD/YD19	Device tag list		11.04.2011
SC-720-CP-10	&EPD/YD20	Device tag list		11.04.2011
SC-720-CP-10	&EPD/YD21	Device tag list		11.04.2011
SC-720-CP-10	&EPD/YD22	Device tag list		11.04.2011
SC-720-CP-10	&EPD/YD23	Device tag list		11.04.2011
SC-720-CP-10	&EPD/YD24	Device tag list		11.04.2011
SC-720-CP-10	&EPD/YD25	Device tag list		11.04.2011
SC-720-CP-10	&EPD/YD26	Device tag list		11.04.2011
SC-720-CP-10	&EPD/YD27	Device tag list		11.04.2011

Attribute of objects (functions, equipment, locations)

The structuring of the system occurs in the aspects:

Check applicable

X	Functional aspect
X	Product aspect
X	Location aspect

The creation of a unique reference attribute for an object occurs in the aspects:

Check applicable

X	Functions	Functional aspect	=
X	device	Product aspect	-
	Locations	Location aspect	+

Equipment is uniquely identified by means of the selected aspects. If multiple aspects are selected, only one aspect is not permissible for the unique identification.

Reference attributes have the following basic structure (the number of data positions in the identification level are not fixed)

=, +, -	A..AN..N	AA = letters, NN = numbers
Prefix depending on aspect	Object	

Presentation and read rules for reference attributes

Note: Function-related reference attributes and location-related reference attributes are normally presented in a higher place in the document.

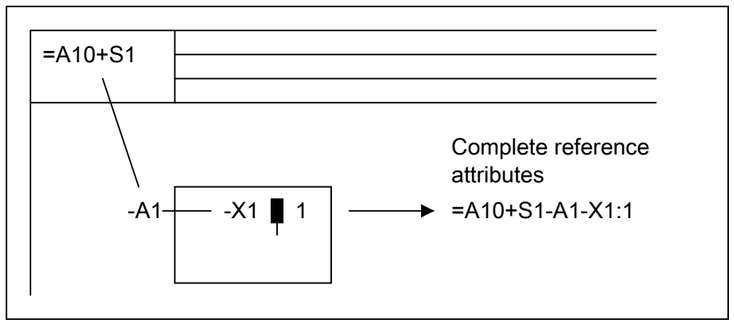

Example for equipment identified in multiple aspects

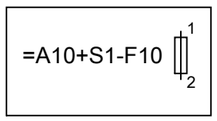

Attribute of documents

The document attribute is presented on the cover sheet and provides unique addressing of the system

Example:

SCXXX-XDE083810

The documentation attribute is presented in the labeling field and provides unique addressing within the system

Document page attributes

Object identifier	&	DCC	/	Page sequence number

Explanation:

Object identifier	Attribute of the object described in the document
&	Prefix for document type
DCC	Document type key
/	separator
Page sequence number	Numerical or alphanumerical count of pages within the document page attribute (a page number will not be used)

Presentation of the document page attribute in the labeling field

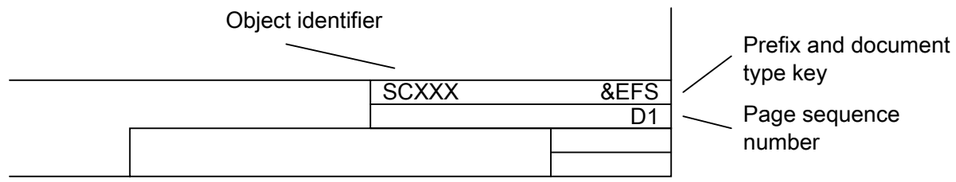

Complete document page attributes:

SCXXX&EFS/D1

Sunny Central 720-CP-10

Designation	Data
Serial number	
Option code	

Potential overview

Designation	Potential	Data
Operating voltage range (Vac 3-Phase) AC control voltage 3-phase	L1,L2,L3 21L1, 21L2, 21L3, 21N	
AC control voltage	22L1, 22L2, 22L3, 21N	
Range of input operating voltage	L+, L-	
DC control voltage	41L+, 41L-, 41GND ; 42L+ ,42L-	

Connections

All cabels without designation in the circuit diagram are	Betatherm 145

Information:

The data can be obtained from the type label and are to be entered in the above column “Data”.

Example:

Designation	Potential	Data
AC voltage	1L1, 1L2, 1L3, 1N	***400V***

The type label can be found inside the device (please refer to installation guide).

Function structure

Function	Description	Function	Description
=SC	Sunny Central 720-CP-10	=8_KR	Option 8/KR language Korean
=1_0	Option 1/0 max. DC-Voltage 1000V	=8_IT	Option 8/IT language Italian
=1_1	Option 1/1 max. DC-Voltage 1100V	=8_FR	Option 8/FR language French
=2_X	Option 2/0 or 2_1 or 2/2	=8_CN	Option 8/CN language Chinese
=2_0	Option 2/0 DC fuses positiv and negativ	=8_CZ	Option 8/CZ language Czech
=2_1	Option 2/1 DC fuses positiv disconnecting blades negativ	=8_GR	Option 8/GR language Greek
=2_2	Option 2/2 DC fuses negativ disconnecting blades positiv	=8_PT	Option 8/PT language Portuguese
=2_3	Spare	=8_NL	Option 8/NL language Dutch
=2_4	Option 2/4 DC Connection point Busbar	=9_DE	Option 9/DE target country Germany
=3_0	Option 3/0 DC protection None	=9_EN	Option 9/EN target country England
=3_1	Option 3/1 DC protection 9 x 200A	=9_ES	Option 9/ES target country Spain
=3_2	Option 3/2 DC protection 9 x 250A	=9_KR	Option 9/KR target country Korea
=3_3	Option 3/3 DC protection 7 x 315A	=9_IT	Option 9/IT target country Italy
=3_4	Option 3/4 DC protection 6 x 400A	=9_FR	Option 9/FR target country France
=3_5	Option 3/5 DC protection 9 x 125A	=9_CN	Option 9/CN target country China
=3_6	Option 3/6 DC protection 9 x 160A	=9_CZ	Option 9/CZ target country Czech
=4_0	Option 4/0 Grounding None	=9_GR	Option 9/DE target country Greece
=4_1	Option 4/1 Grounding Minus grounded and GFDI	=9_PT	Option 9/PT target country Portugal
=4_2	Option 4/2 Grounding Minus grounded and Remote GFDI	=9_NL	Option 9/NL target country Netherlands
=4_3	Option 4/3 Grounding Plus grounded and GFDI	=9_US	Option 9/US target country USA
=4_4	Option 4/4 Grounding Plus grounded and Remote GFDI	=10_0	Option 10/0 AC Switch
=4_5	Option 4/5 Grounding Softgrounding Plus	=10_1	Option 10/1 AC Switch
=4_6	Option 4/6 Grounding Softgrounding Minus	=10_2	Option 10/2 AC Switch
=5_0	Option 5/0 Insulation monitoring None	=10_3	Option 10/3 AC Switch without
=5_1	Option 5/1 Insulation monitoring Yes	=11_0	Option 11/0 Connection point SCM None
=5_2	Option 5_2 Isolationsüberwachung mit GFDI	=11_1	Option 11/1 Connection point SCM Yes 2 HUBS
=6_0	Option 6/0 Communication Display	=11_2	Option 11/2 Connection point SCM Yes 3 HUBS
=6_1	Option 6/1 Communication no Display	=12_0	Option 12/0 AC Voltage 360V
=7_0	Option 7/0 LWL elements no	=12_1	Option 12/1 AC Voltage 351V
=7_1	Option 7/1 LWL elements with LWL converter	=12_2	Option 12/2 AC Voltage 342V
=8_DE	Option 8/DE language German	=12_3	Option 12/3 AC Voltage 333V
=8_EN	Option 8/EN language English	=12_4	Option 12/4 AC Voltage 324V
=8_ES	Option 8/ES language Spanish	=12_5	Option 12/5 AC Voltage 315V

Function structure

Function	Description	Function	Description
=12_6	Option 12/6 AC Spannung 270V		
=14_0	Option 14/0 no		
=14_1	Option 14/1 yes		
=14_2	Option 14/2 Technical Package 1		
=14_3	Option 14/3 Technical Package 2		
=14_4	Option 14/4 Technical Package 3		
=A1	Option =2_0 und 3_1		
=A2	Option =2_0 und 3_2		
=A3	Option =2_0 und 3_3		
=A4	Option =2_0 und 3_4		
=A5	Option =2_0 und 3_5		
=A6	Option =2_0 und 3_6		
=B1	Option =2_1 und 3_1		
=B2	Option =2_1 und 3_2		
=B3	Option =2_1 und 3_3		
=B4	Option =2_1 und 3_4		
=B5	Option =2_1 und 3_5		
=B6	Option =2_1 und 3_6		
=C1	Option =2_2 und 3_1		
=C2	Option =2_2 und 3_2		
=C3	Option =2_2 und 3_3		
=C4	Option =2_2 und 3_4		
=C5	Option =2_2 und 3_5		
=C6	Option =2_2 und 3_6		

=SC

			Date	07.04.2011	Sunny Central 720-CP-10		SMA Solar Technology AG D-34266 Niestetal +49 (0)561 - 9522 - 0	switch cabinet view	SC-720-CP-10:A	SC-720-CP-10 &ETL AU1
			Author	R.Branz						
			Checked	J.Bader						
Modification	Date	Name	Origin		Replacement of	Replaced by				SC-720-CP-10-CEN110910

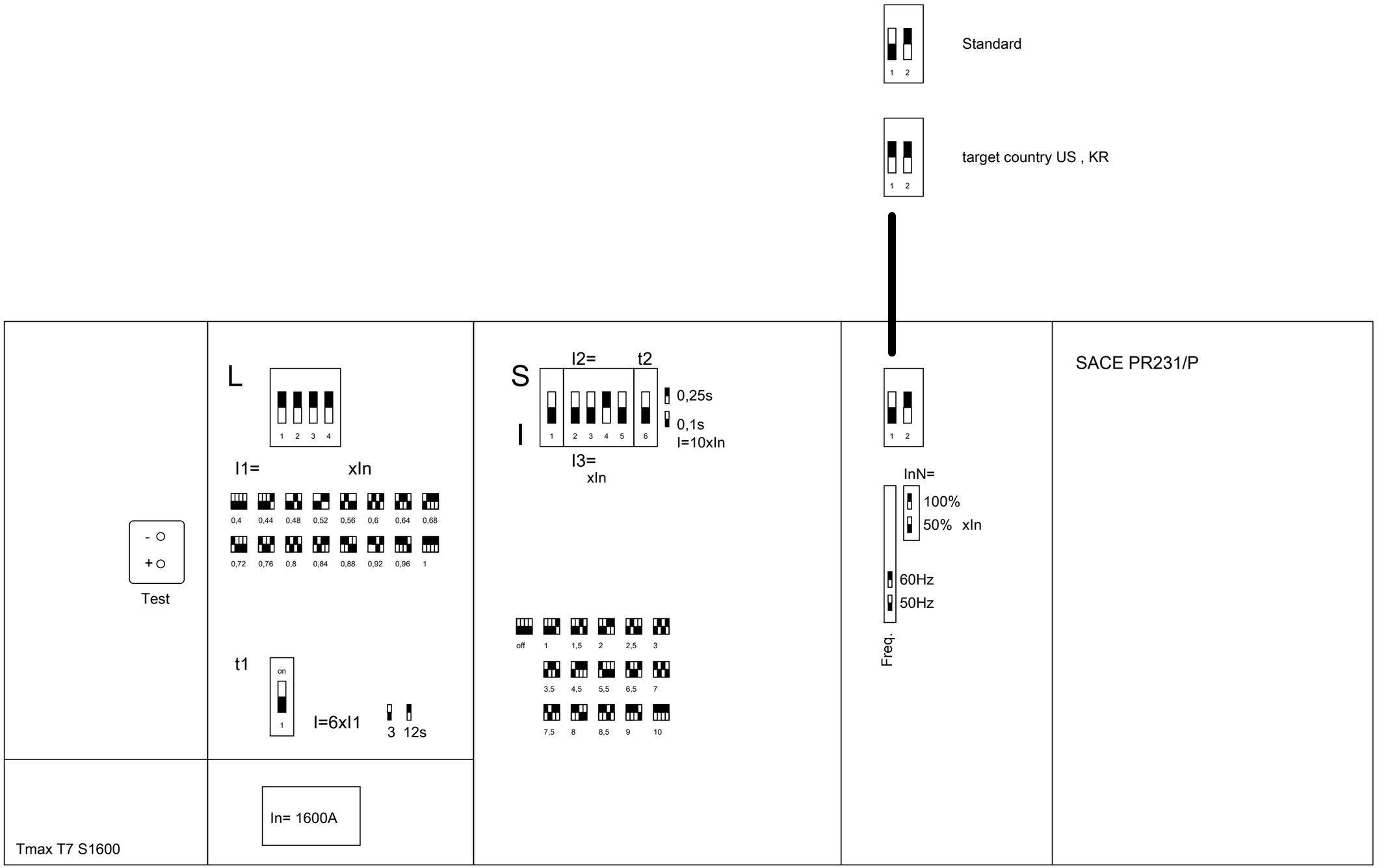

dip switch to top

dip switch to below

			Date	07.04.2011	Sunny Central 720-CP-10	SMA	SMA Solar Technology AG D-34266 Niestetal +49 (0)561 - 9522 - 0	setting AC Power circuit breaker	SC-720-CP-10:A	SC-720-CP-10 &ETL
			Author	R.Branz						AU2
			Checked	J.Bader						
Modification	Date	Name	Origin		Replacement of	Replaced by			SC-720-CP-10-CEN110910	

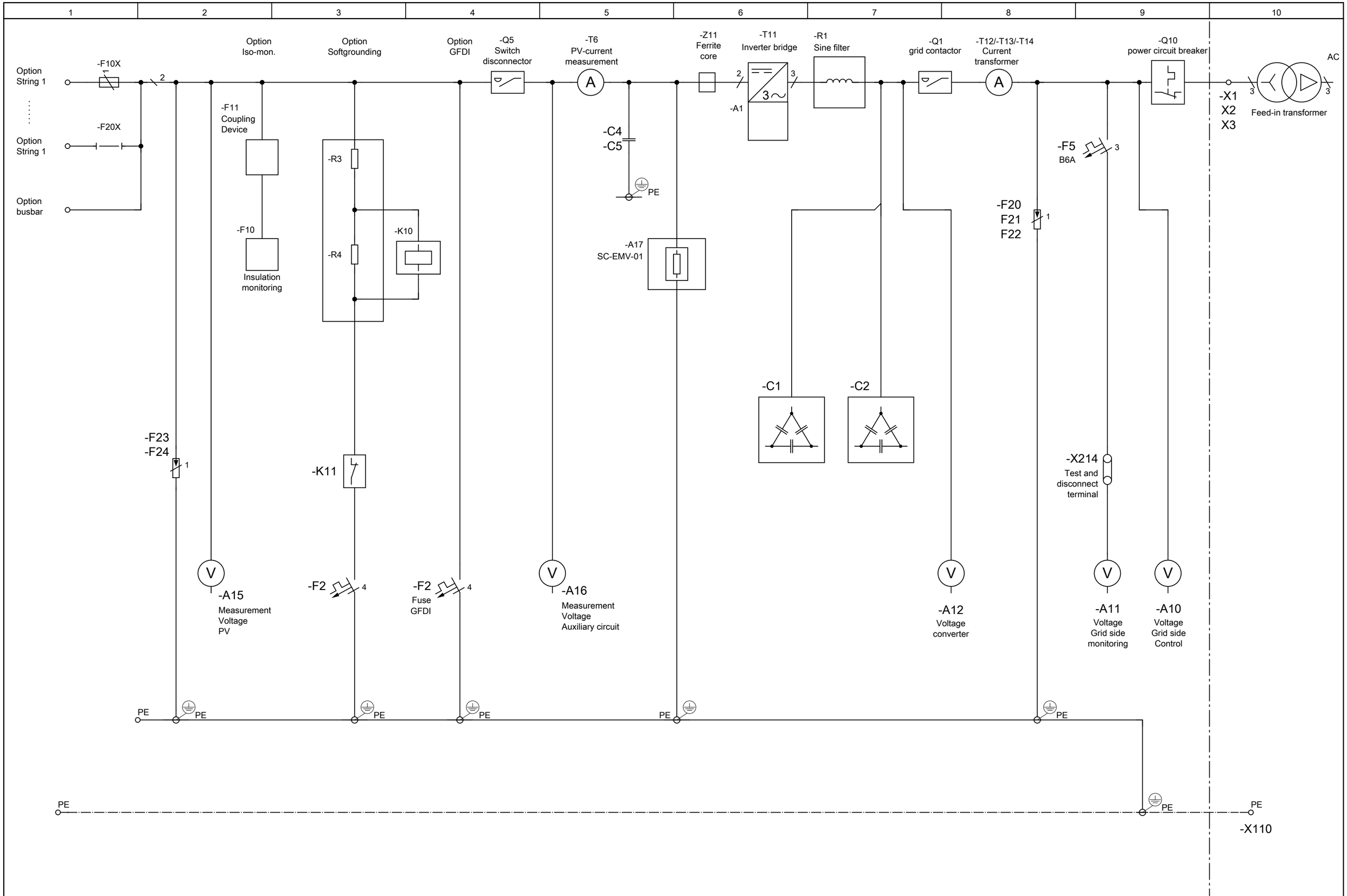

			Date	11.04.2011	Sunny Central 720-CP-10	SMA	SMA Solar Technology AG D-34266 Niestetal +49 (0)561 - 9522 - 0	Wiring diagram overview	SC-720-CP-10:A	SC-720-CP-10	&EFA
			Author	R.Branz							BA1
			Checked	J.Bader							
Modification	Date	Name	Origin		Replacement of	Replaced by				SC-720-CP-10-CEN110910	

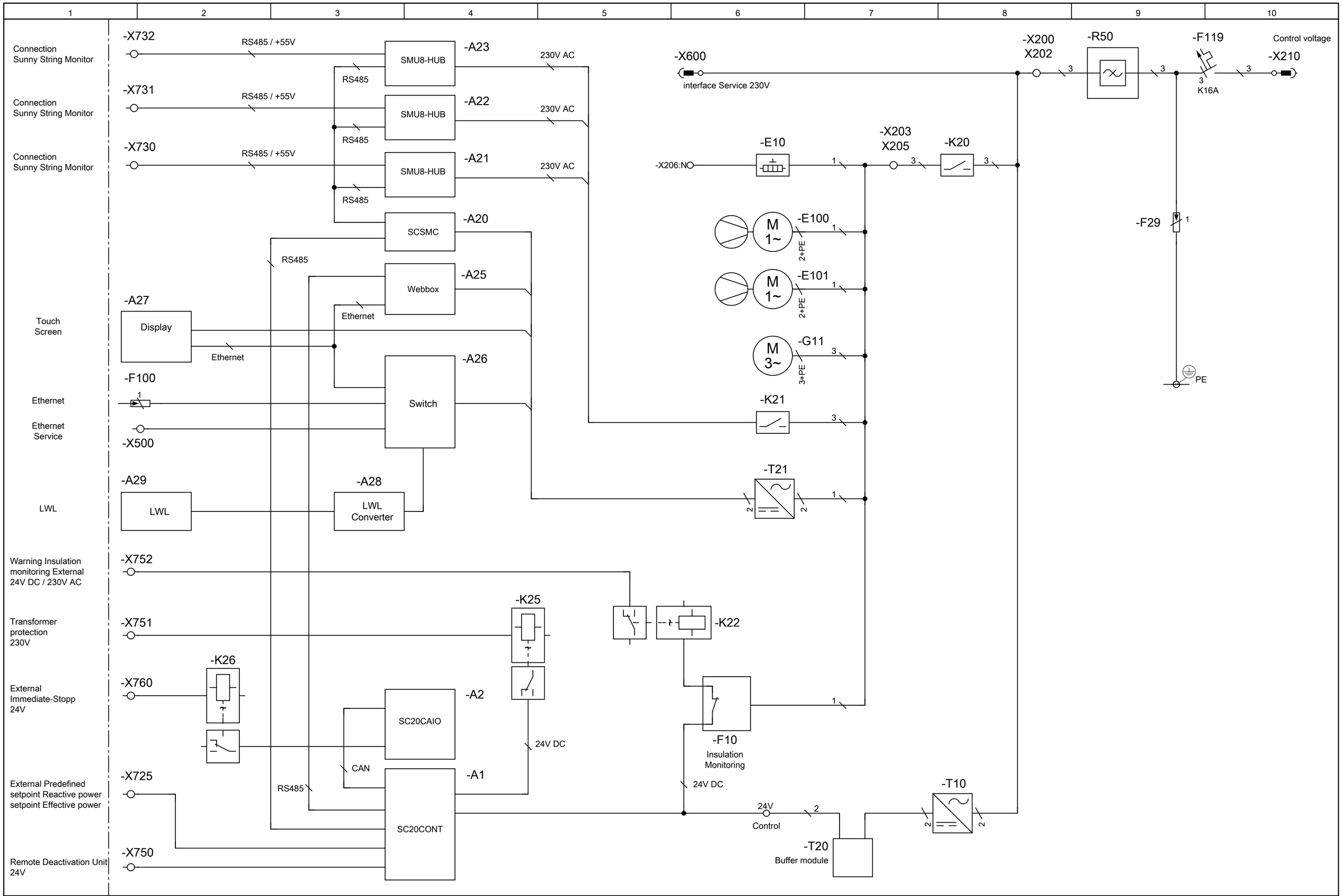

			Date	11.04.2011	Sunny Central 720-CP-10	SMA	SMA Solar Technology AG D-34266 Niestetal +49 (0)561 - 9522 - 0	Wiring diagram overview Control	SC-720-CP-10:A	SC-720-CP-10 &EFA BA2
			Author	R.Branz						
			Checked	J.Bader						
Modification	Date	Name	Origin		Replacement of	Replaced by				SC-720-CP-10-CEN110910

1	2	3	4	5	6	7	8	9	10

=SC

-X110 = power supply PE

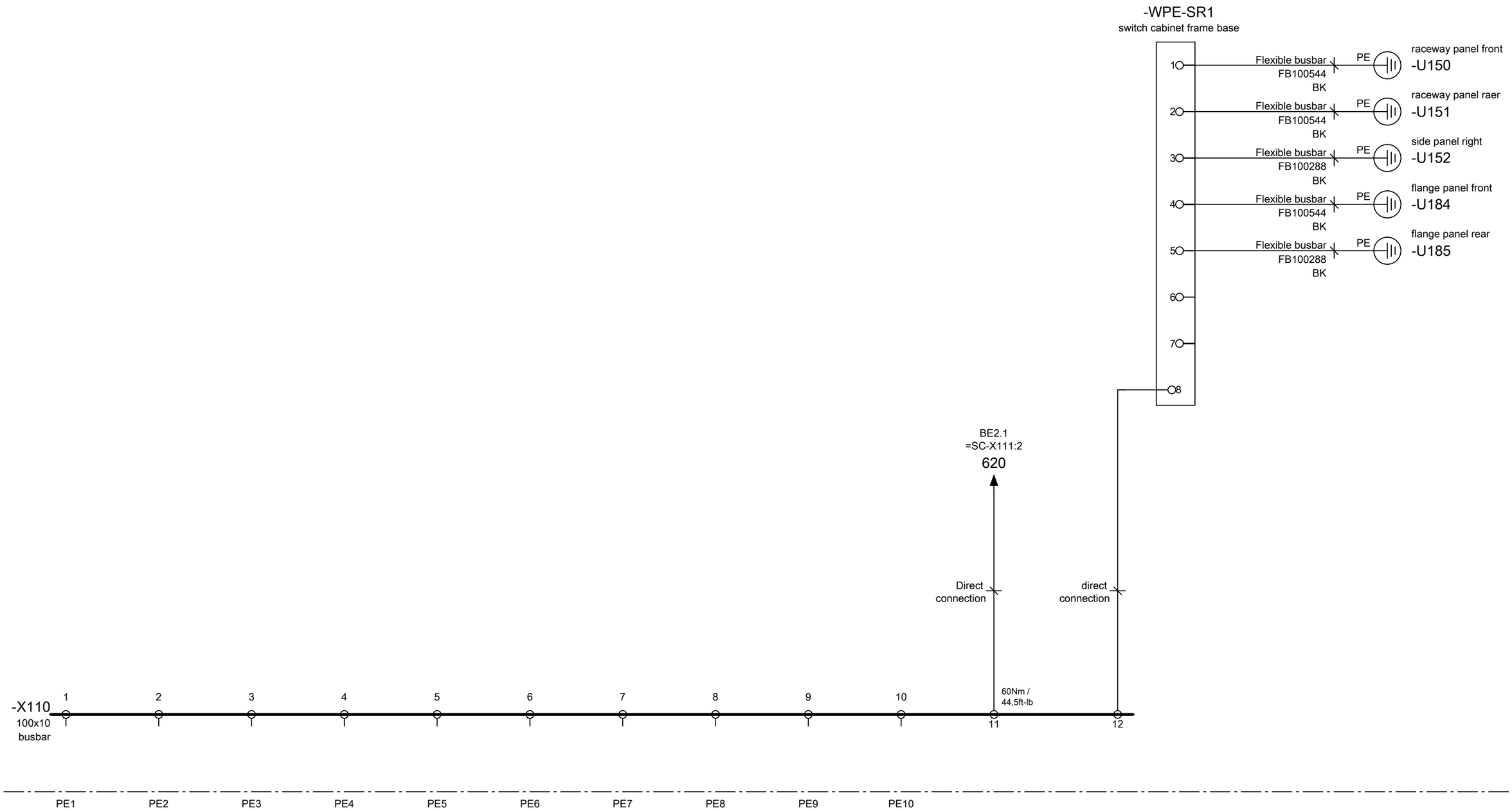

Standard

			Date	07.04.2011	Sunny Central 720-CP-10	SMA Solar Technology AG D-34266 Niestetal +49 (0)561 - 9522 - 0	Grounding plan Power supply	SC-720-CP-10:A	SC-720-CP-10	&EFE
			Author	R.Branz						BE1
			Checked	J.Bader						
Modification	Date	Name	Origin		Replacement of	Replaced by			SC-720-CP-10-CEN110910	

1	2	3	4	5	6	7	8	9	10

=SC — Control Cabinet

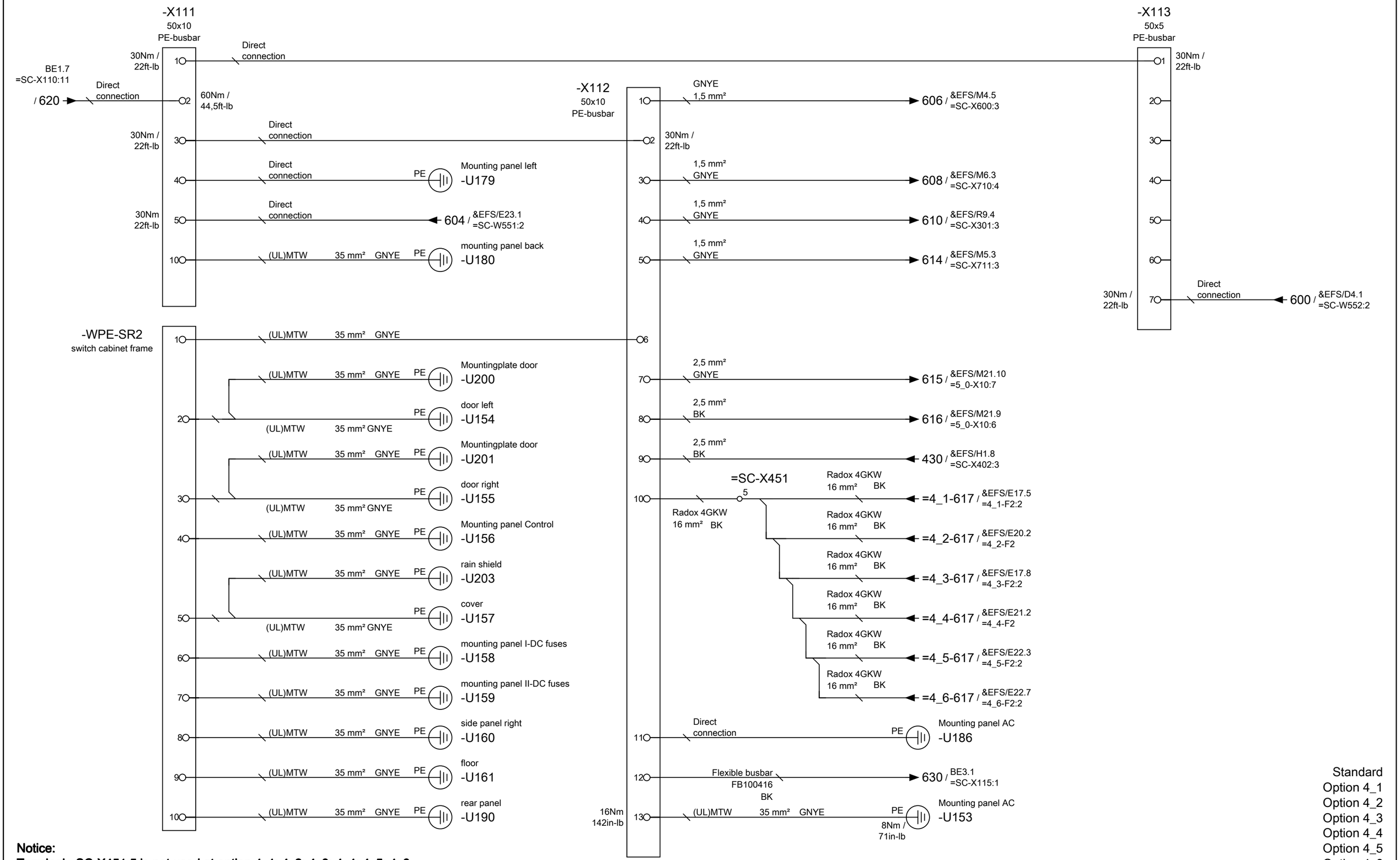

Standard
Option 4_1
Option 4_2
Option 4_3
Option 4_4
Option 4_5
Option 4_6

Notice:
Terminal =SC-X451:5 is not used at option 4_1; 4_2; 4_3; 4_4; 4_5; 4_6

			Date	07.04.2011	Sunny Central 720-CP-10	SMA Solar Technology AG D-34266 Niestetal +49 (0)561 - 9522 - 0	Grounding plan Interface Cabinet	SC-720-CP-10:A	SC-720-CP-10 &EFE BE2
			Author	R.Branz					
			Checked	J.Bader					
Modification	Date	Name	Origin		Replacement of	Replaced by		SC-720-CP-10-CEN110910	

1	2	3	4	5	6	7	8	9	10

=SC — Power Cabinet

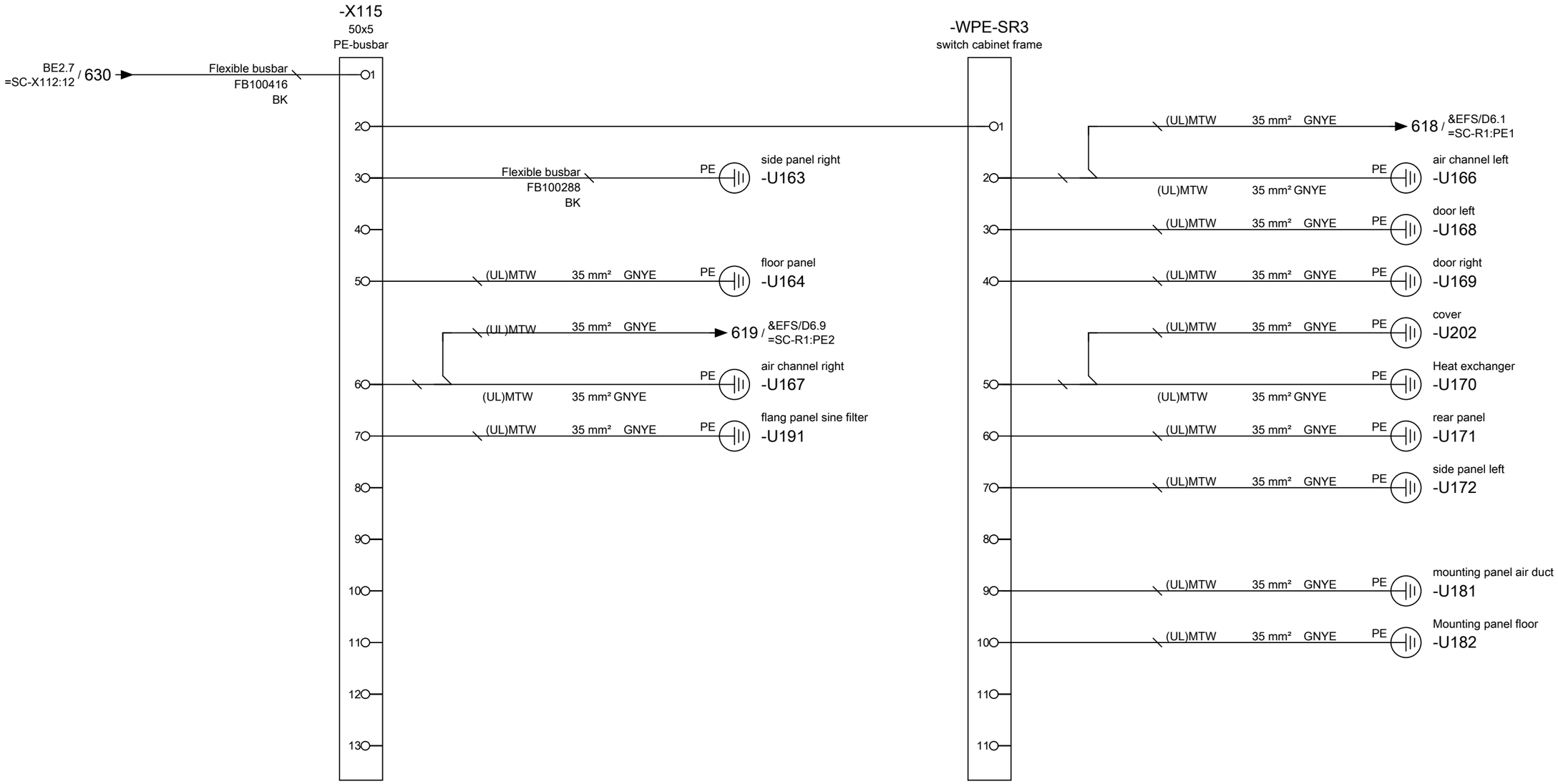

Standard

			Date	07.04.2011	Sunny Central 720-CP-10	SMA Solar Technology AG D-34266 Niestetal +49 (0)561 - 9522 - 0	Grounding plan Inverter Cabinet	SC-720-CP-10:A	SC-720-CP-10 &EFE BE3
			Author	R.Branz					
			Checked	J.Bader					
Modification	Date	Name	Origin		Replacement of / Replaced by			SC-720-CP-10-CEN110910	

1	2	3	4	5	6	7	8	9	10

=SC

-X1 = Grid feeding L1 -X2 = Grid feeding L2 -X3 = Grid feeding L3

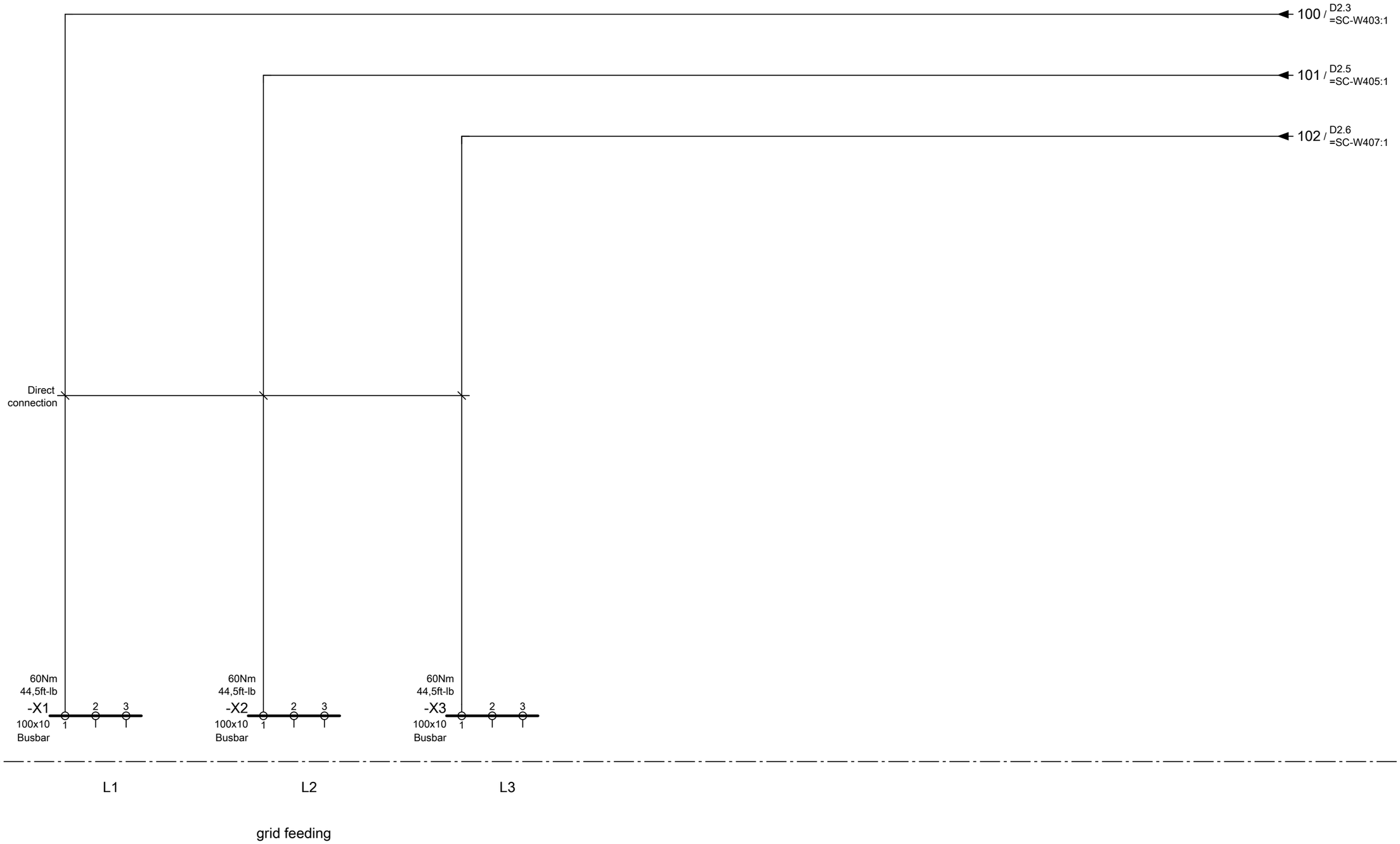

Standard

			Date	07.04.2011	Sunny Central 720-CP-10	SMA	SMA Solar Technology AG D-34266 Niestetal +49 (0)561 - 9522 - 0	AC Grid feeding	SC-720-CP-10:A	SC-720-CP-10 &EFS D1
			Author	R.Branz						
			Checked	J.Bader						
Modification	Date	Name	Origin		Replacement of	Replaced by			SC-720-CP-10-CEN110910	

1	2	3	4	5	6	7	8	9	10

=SC — AC Main switch — =10_3-X40 = AC-Main switch Option 10_3

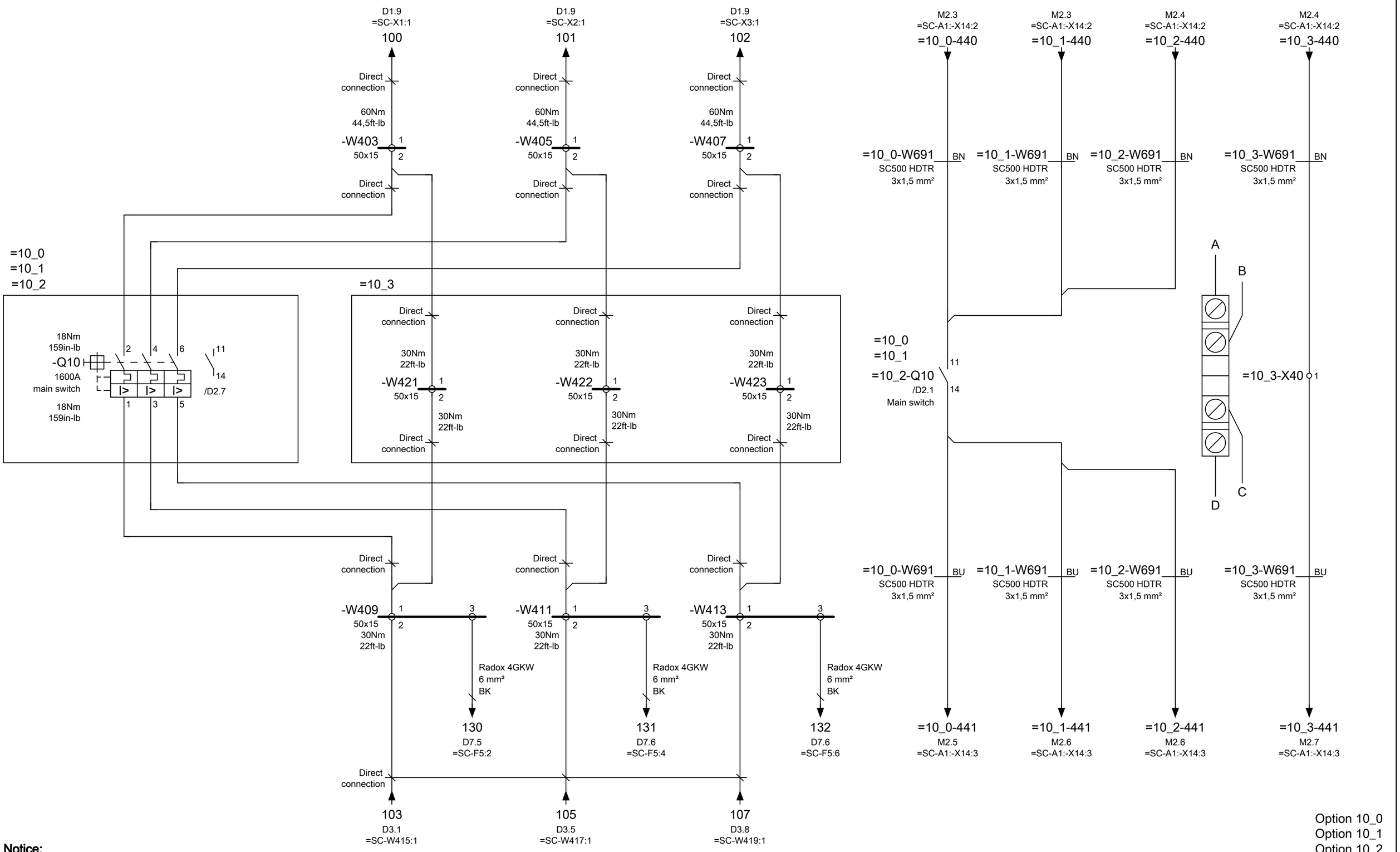

Notice:
Terminal strip =10_3-X40 is not used at option 10_0; 10_1; 10_2

			Date	07.04.2011	Sunny Central 720-CP-10	SMA	SMA Solar Technology AG D-34266 Niestetal +49 (0)561 - 9522 - 0	AC Main switch	SC-720-CP-10:A	SC-720-CP-10 &EFS D2
			Author	R.Branz						
			Checked	J.Bader						
Modification	Date	Name	Origin		Replacement of	Replaced by			SC-720-CP-10-CEN110910	

1	2	3	4	5	6	7	8	9	10

=SC

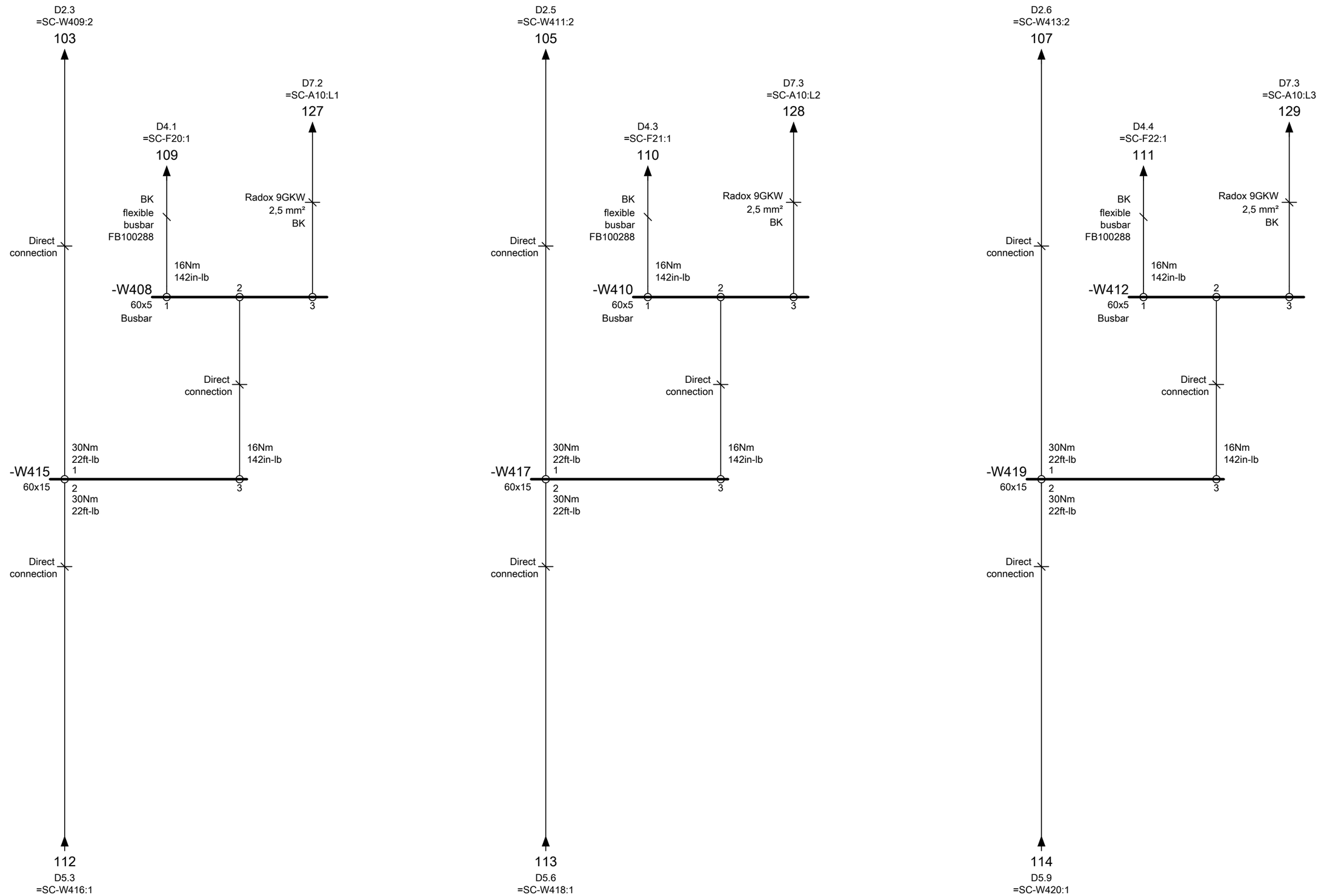

Standard

			Date	07.04.2011	Sunny Central 720-CP-10	SMA Solar Technology AG D-34266 Niestetal +49 (0)561 - 9522 - 0	AC Low voltage	SC-720-CP-10:A	SC-720-CP-10	&EFS
			Author	R.Branz						D3
			Checked	J.Bader						
Modification	Date	Name	Origin		Replacement of	Replaced by			SC-720-CP-10-CEN110910	

1	2	3	4	5	6	7	8	9	10

=SC — Discharger

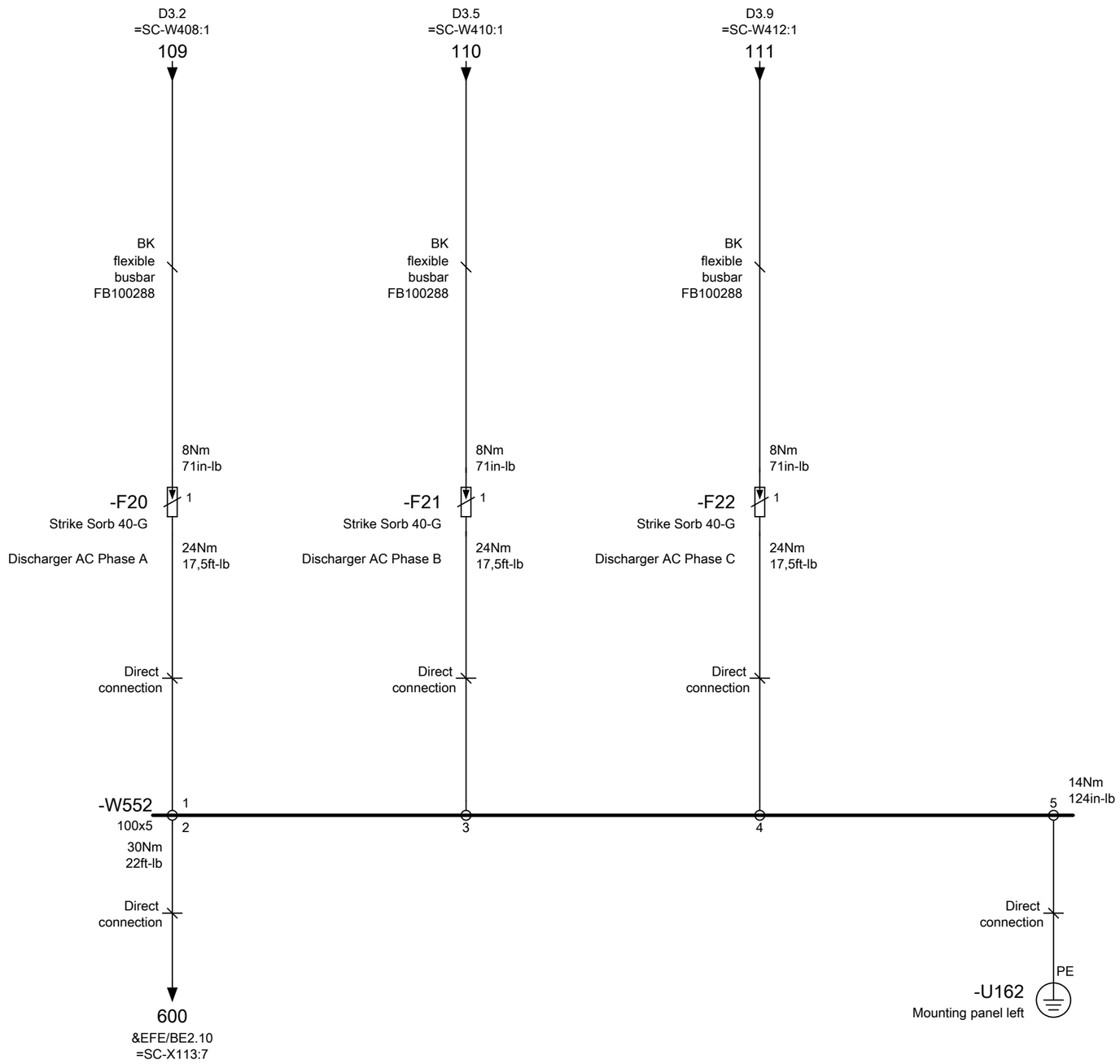

Standard

			Date	07.04.2011	Sunny Central 720-CP-10	SMA Solar Technology AG D-34266 Niestetal +49 (0)561 - 9522 - 0	AC Discharger	SC-720-CP-10:A	SC-720-CP-10 &EFS
			Author	R.Branz					D4
			Checked	J.Bader					
Modification	Date	Name	Origin		Replacement of / Replaced by			SC-720-CP-10-CEN110910	

1	2	3	4	5	6	7	8	9	10
=SC	AC Current measurement				AC Current measurement			AC Current measurement	
	L1				L2			L3	
	Grid contactor								

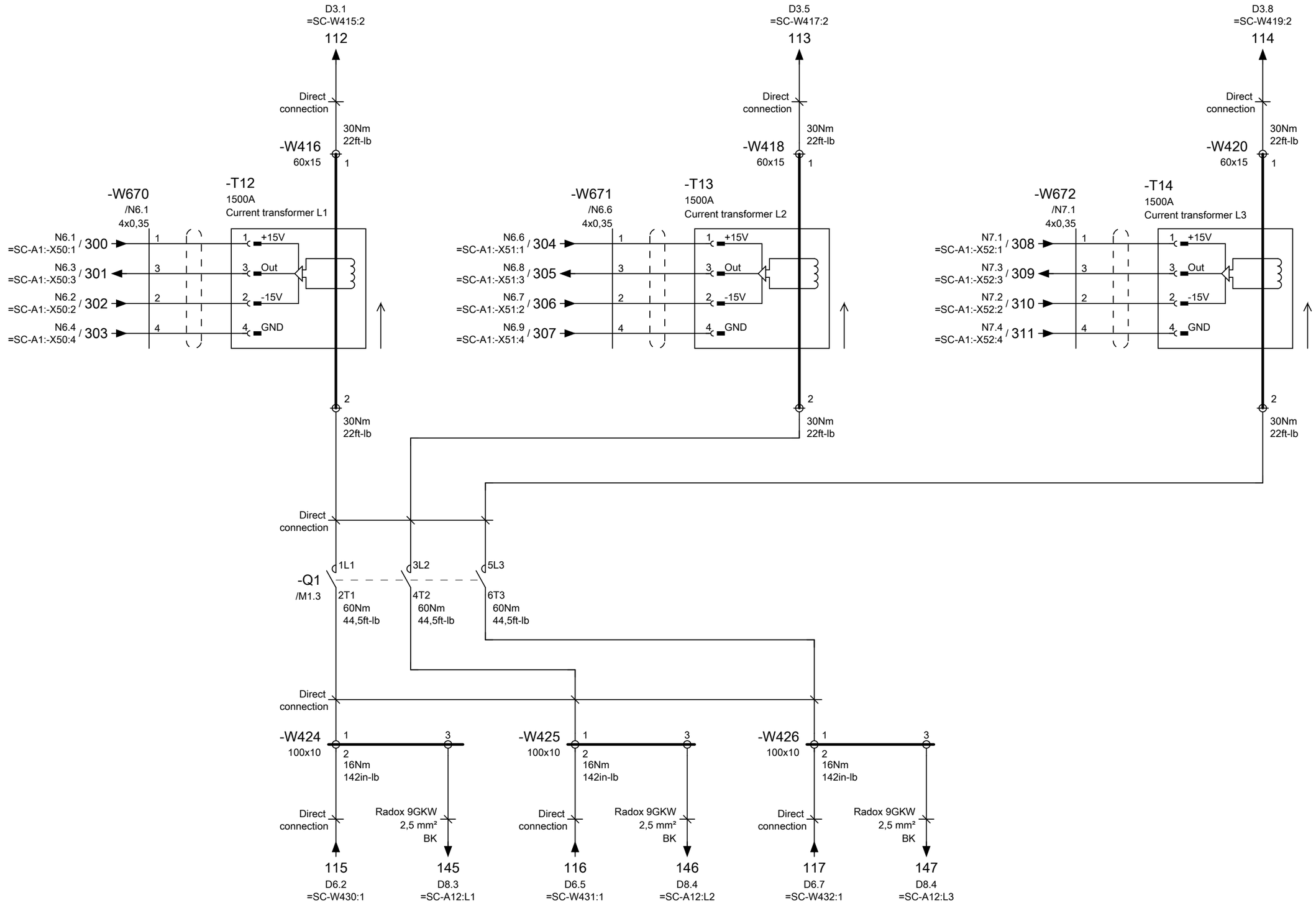

Standard

			Date	07.04.2011	Sunny Central 720-CP-10	SMA Solar Technology AG D-34266 Niestetal +49 (0)561 - 9522 - 0	AC Current measurement AC Grid contactor	SC-720-CP-10:A	SC-720-CP-10	&EFS
			Author	R.Branz						D5
			Checked	J.Bader						
Modification	Date	Name	Origin		Replacement of	Replaced by			SC-720-CP-10-CEN110910	

=SC

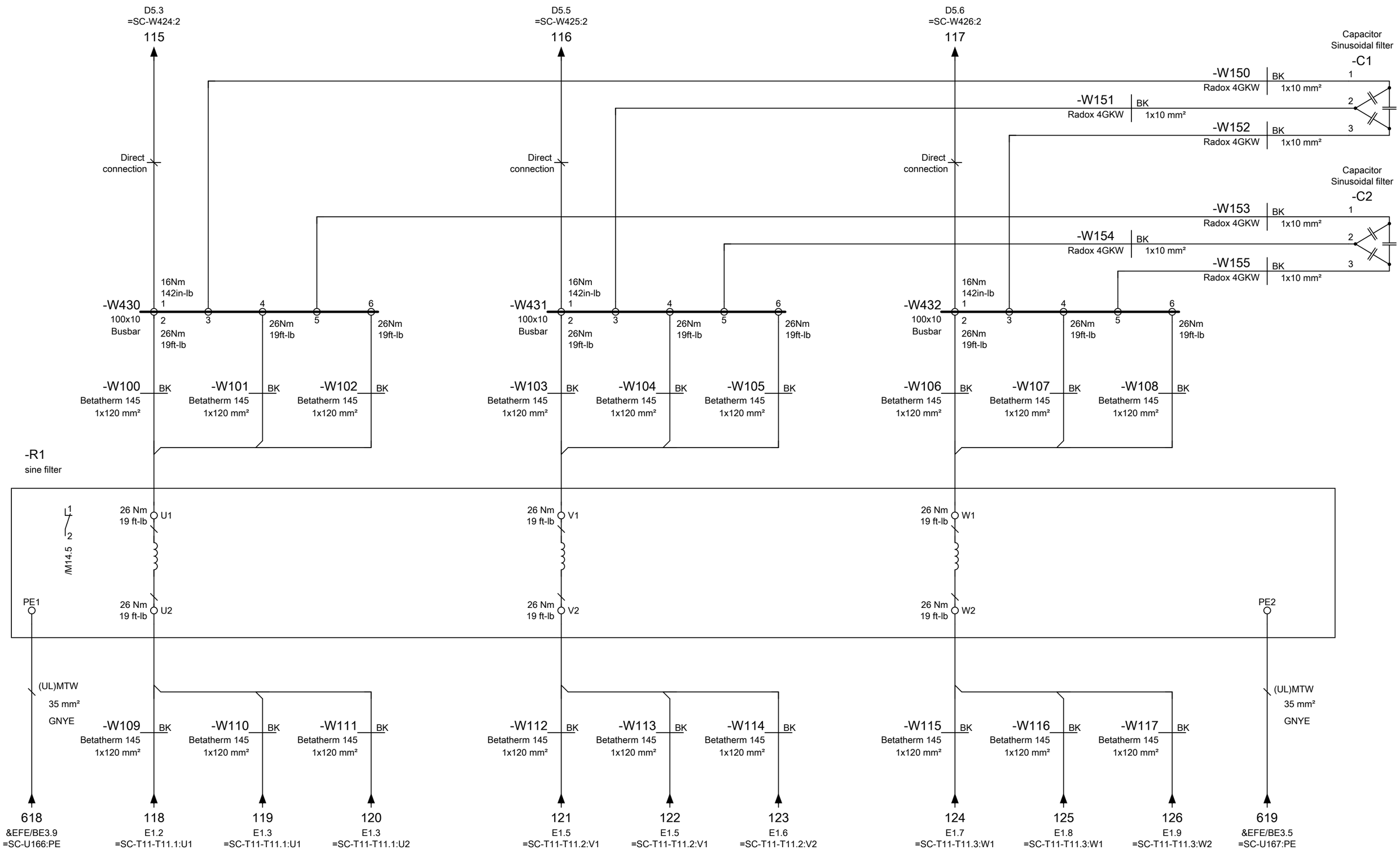

Standard

			Date	07.04.2011	Sunny Central 720-CP-10	SMA Solar Technology AG D-34266 Niestetal +49 (0)561 - 9522 - 0	sine filter	SC-720-CP-10:A	SC-720-CP-10	&EFS
			Author	R.Branz						D6
			Checked	J.Bader						
Modification	Date	Name	Origin		Replacement of	Replaced by			SC-720-CP-10-CEN110910	

1	2	3	4	5	6	7	8	9	10
=SC	voltage measurement Grid side control						voltage measurement Grid side monitoring		

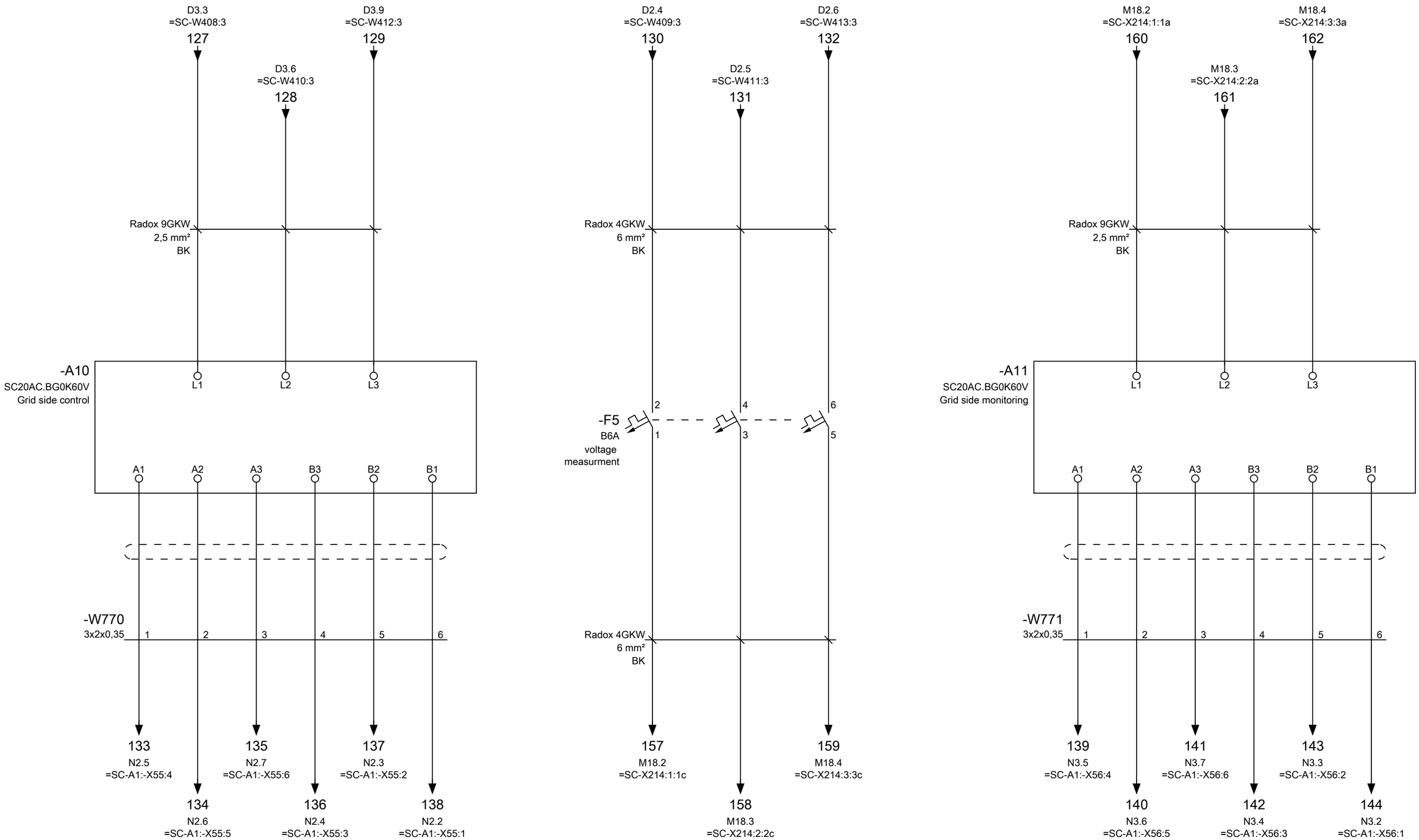

Standard

			Date	07.04.2011	Sunny Central 720-CP-10	SMA Solar Technology AG D-34266 Niestetal +49 (0)561 - 9522 - 0	voltage measurement Grid side	SC-720-CP-10:A	SC-720-CP-10	&EFS
			Author	R.Branz						D7
			Checked	J.Bader					SC-720-CP-10-CEN110910	
Modification	Date	Name	Origin		Replacement of	Replaced by				

1	2	3	4	5	6	7	8	9	10

=SC

voltage measurement
converter monitoring

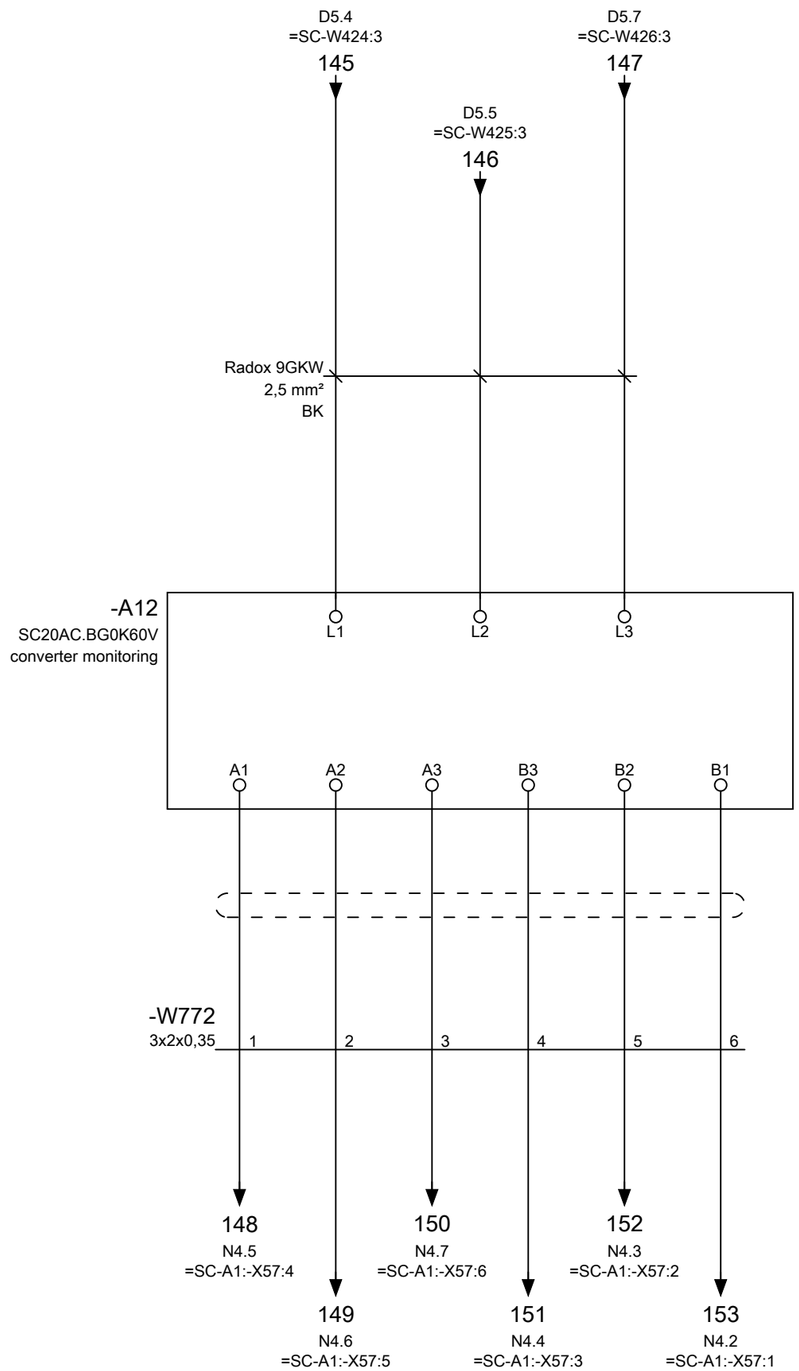

Standard

			Date	07.04.2011	Sunny Central 720-CP-10	SMA Solar Technology AG D-34266 Niestetal +49 (0)561 - 9522 - 0	voltage measurement converter	SC-720-CP-10:A	SC-720-CP-10 &EFS D8
			Author	R.Branz					
			Checked	J.Bader					
Modification	Date	Name	Origin		Replacement of / Replaced by			SC-720-CP-10-CEN110910	

=SC

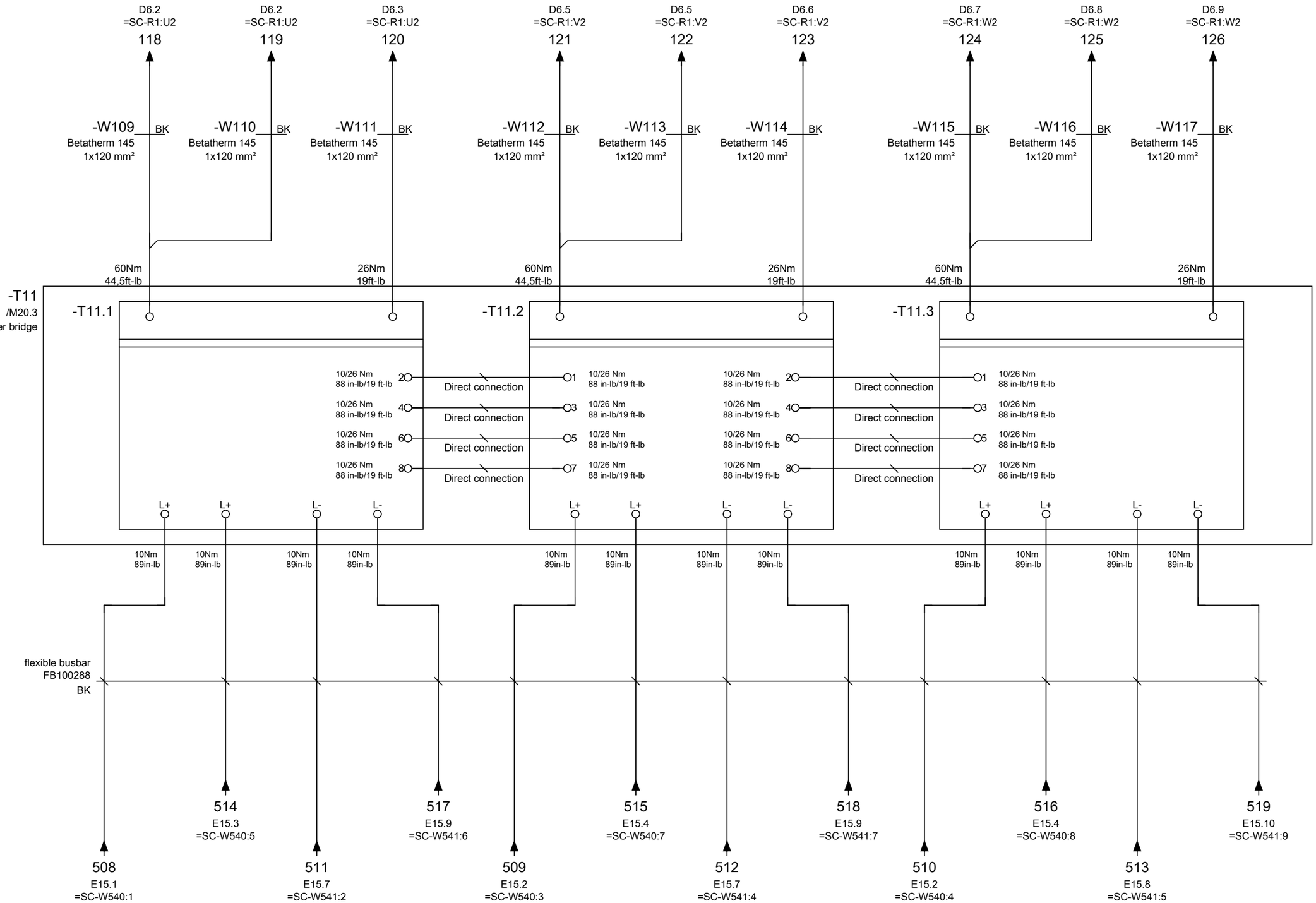

Standard

			Date	07.04.2011	Sunny Central 720-CP-10	SMA	SMA Solar Technology AG D-34266 Niestetal +49 (0)561 - 9522 - 0	Inverter bridge	SC-720-CP-10:A	SC-720-CP-10 &EFS
			Author	R.Branz						E1
			Checked	J.Bader						
Modification	Date	Name	Origin		Replacement of	Replaced by			SC-720-CP-10-CEN110910	

1	2	3	4	5	6	7	8	9	10
=2_X	=2_X-X10 = DC Power supply Plus		=2_X-X12 = DC Power supply Plus		=2_X-X14 = DC Power supply Plus		=2_X-X16 = DC Power supply Plus		=2_X-X18 = DC Power supply Plus
	=2_X-X11 = DC Power supply Plus			=2_X-X13 = DC Power supply Plus		=2_X-X15 = DC Power supply Plus		=2_X-X17 = DC Power supply Plus	

Notice:
The fuse rating is dependent on option 3

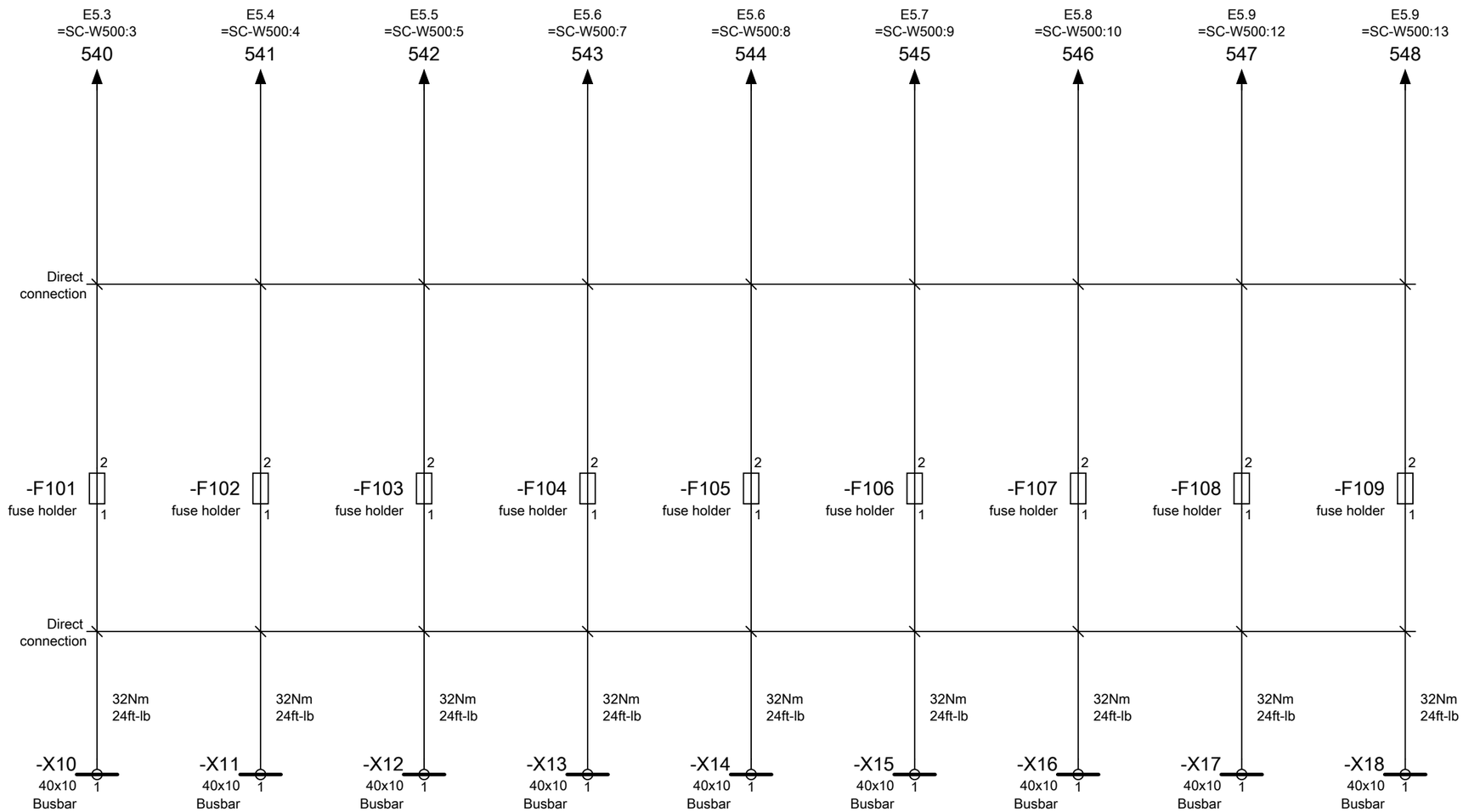

=2_0 Fuses negativ and positiv DC-input L+	L+	L+	L+	L+	L+	L+	L+	L+	L+
=2_1 Fuses positiv disconnecting blades negativ DC-input L+	L+	L+	L+	L+	L+	L+	L+	L+	L+
=2_2 Fuses negativ disconnecting blades positiv DC-input L+	L+	L+	L+	L+	L+	L+	L+	L+	L+

Option 2_0
Option 2_1
Option 2_2

			Date	07.04.2011	Sunny Central 720-CP-10	SMA Solar Technology AG D-34266 Niestetal +49 (0)561 - 9522 - 0	DC Power supply Plus 2_0 / 2_1 / 2_2	SC-720-CP-10:A	SC-720-CP-10 &EFS
			Author	R.Branz					E2
			Checked	J.Bader					
Modification	Date	Name	Origin		Replacement of	Replaced by		SC-720-CP-10-CEN110910	

1	2	3	4	5	6	7	8	9	10
=2_X	=2_X-X20 = DC Power supply Minus		=2_X-X22 = DC Power supply Minus		=2_X-X24 = DC Power supply Minus		=2_X-X26 = DC Power supply Minus		=2_X-X28 = DC Power supply Minus
	=2_X-X21 = DC Power supply Minus		=2_X-X23 = DC Power supply Minus		=2_X-X25 = DC Power supply Minus		=2_X-X27 = DC Power supply Minus		

Notice:
The fuse rating is dependent on option 3

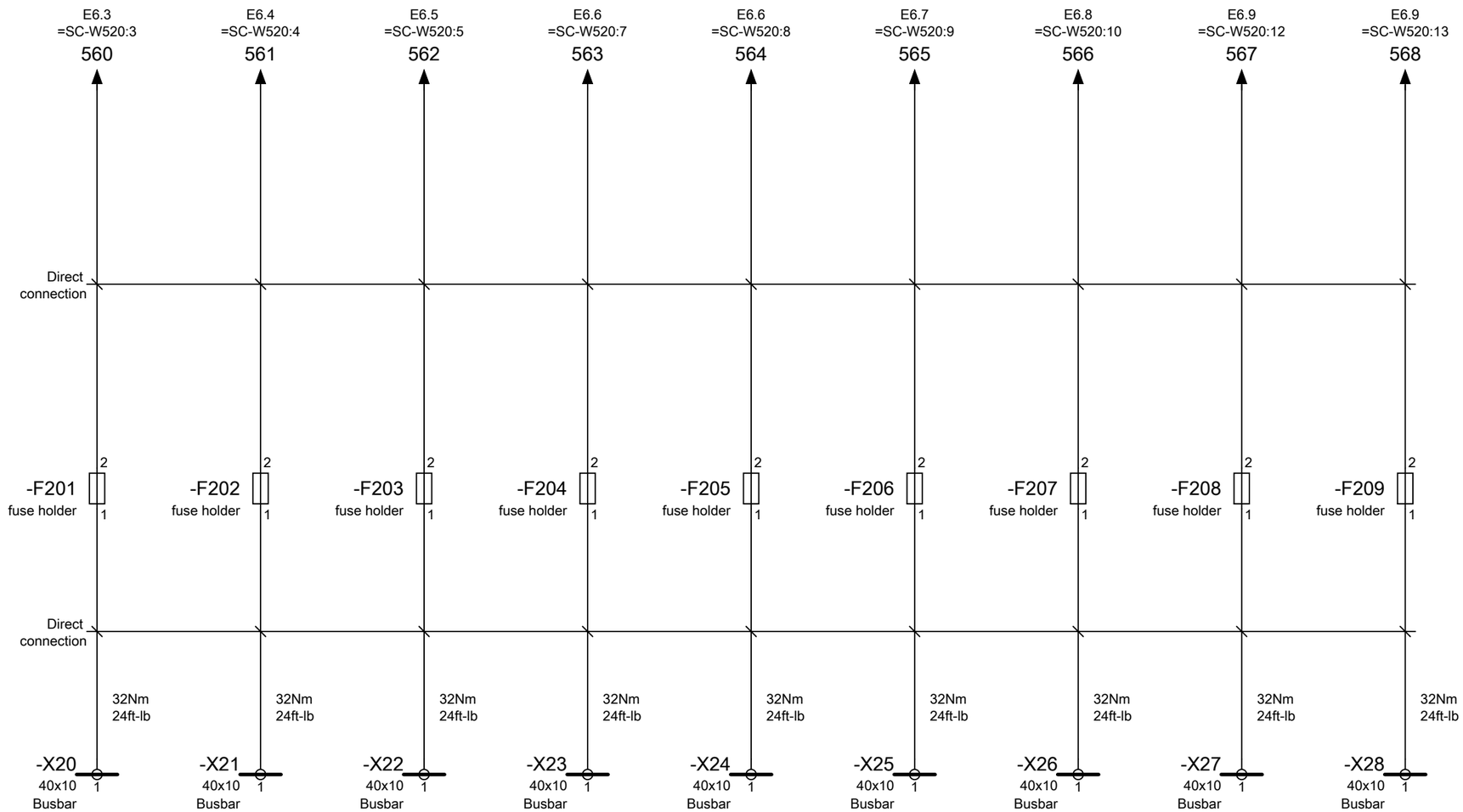

=2_0 Fuses negativ and positiv DC-input L-	L-	L-	L-	L-	L-	L-	L-	L-	L-
=2_1 Fuses positiv disconnecting blades negativ DC-input L-	L-	L-	L-	L-	L-	L-	L-	L-	L-
=2_2 Fuses negativ disconnecting blades positiv DC-input L-	L-	L-	L-	L-	L-	L-	L-	L-	L-

Option 2_0
Option 2_1
Option 2_2

			Date	07.04.2011	Sunny Central 720-CP-10	SMA Solar Technology AG D-34266 Niestetal +49 (0)561 - 9522 - 0	DC Power supply Minus 2_0 / 2_1 / 2_2	SC-720-CP-10:A	SC-720-CP-10 &EFS E3
			Author	R.Branz					
			Checked	J.Bader					
Modification	Date	Name	Origin		Replacement of	Replaced by		SC-720-CP-10-CEN110910	

1	2	3	4	5	6	7	8	9	10
=2_4	-X19 = DC Power supply Plus Busbar				-X29 = DC Power supply Minus Busbar				

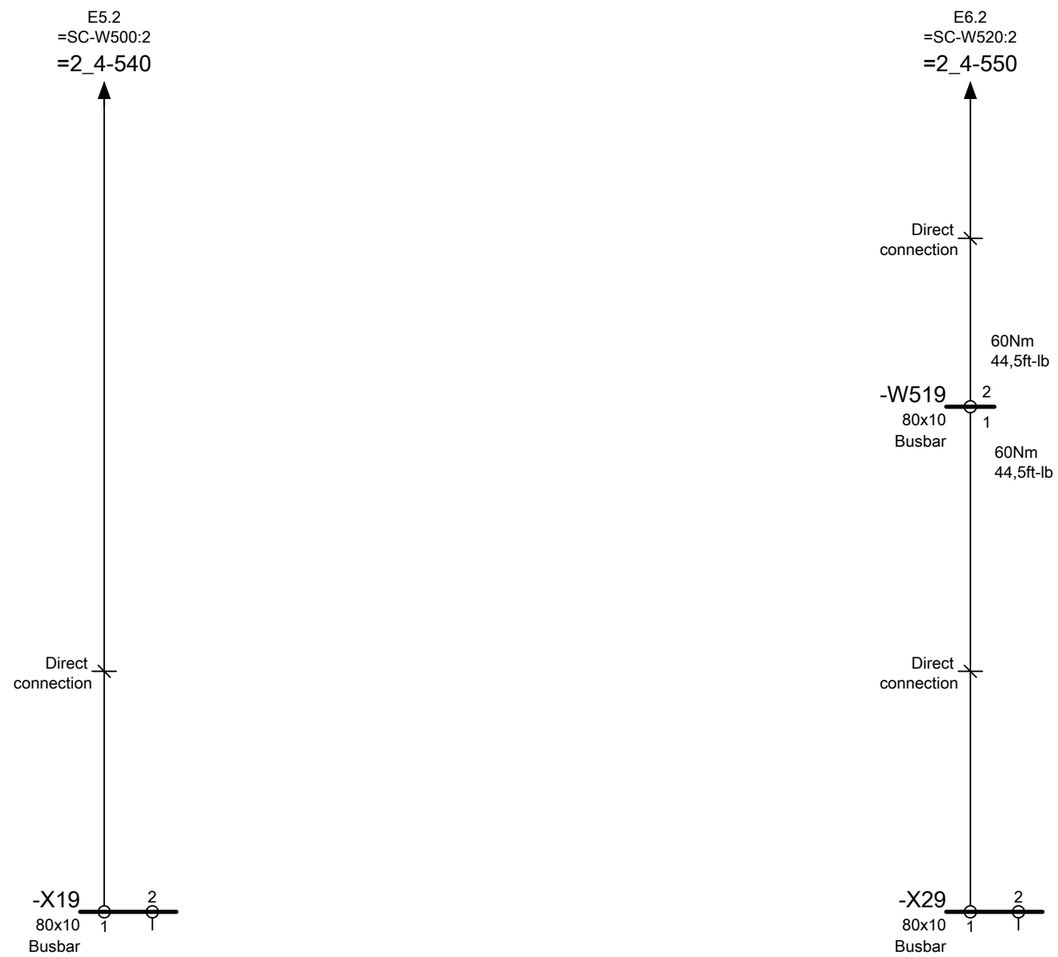

=2_4
Busbar

L+

L-

DC Power supply Plus

DC Power supply Minus

Option 2_4

			Date	07.04.2011	Sunny Central 720-CP-10	SMA	SMA Solar Technology AG D-34266 Niestetal +49 (0)561 - 9522 - 0	DC Power supply 2_4	SC-720-CP-10:A	SC-720-CP-10	&EFS
			Author	R.Branz							E4
			Checked	J.Bader							
Modification	Date	Name	Origin		Replacement of	Replaced by				SC-720-CP-10-CEN110910	

1	2	3	4	5	6	7	8	9	10

=SC

=5_0-X470 = PV-Voltage Coupling device

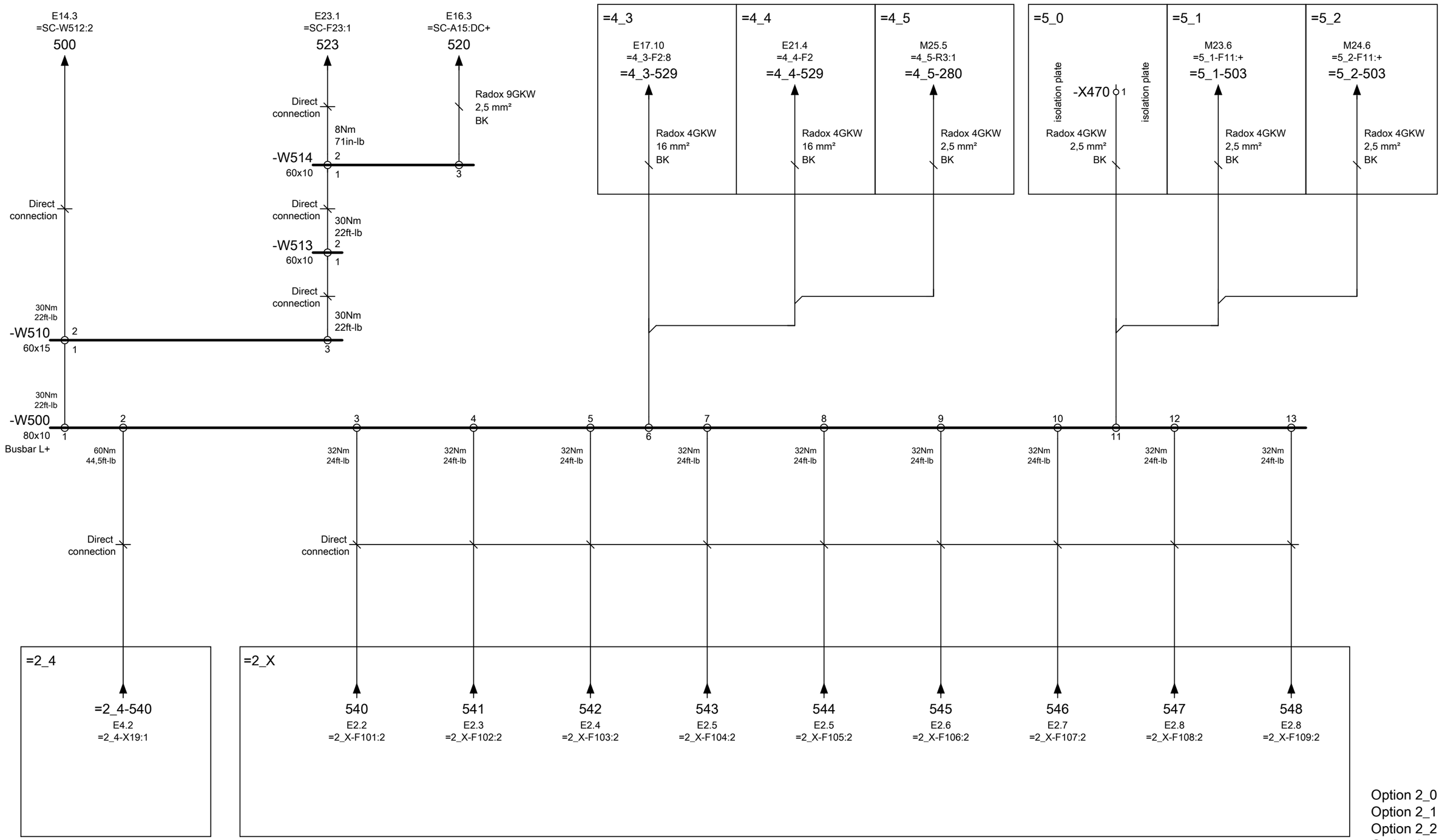

Option 2_0
Option 2_1
Option 2_2
Option 2_4
Option 4_3
Option 4_4
Option 4_5
Option 5_0
Option 5_1
Option 5_2

			Date	07.04.2011	Sunny Central 720-CP-10	SMA	SMA Solar Technology AG D-34266 Niestetal +49 (0)561 - 9522 - 0	DC Power supply Plus	SC-720-CP-10:A	SC-720-CP-10	&EFS
			Author	R.Branz							E5
			Checked	J.Bader							
Modification	Date	Name	Origin		Replacement of	Replaced by				SC-720-CP-10-CEN110910	

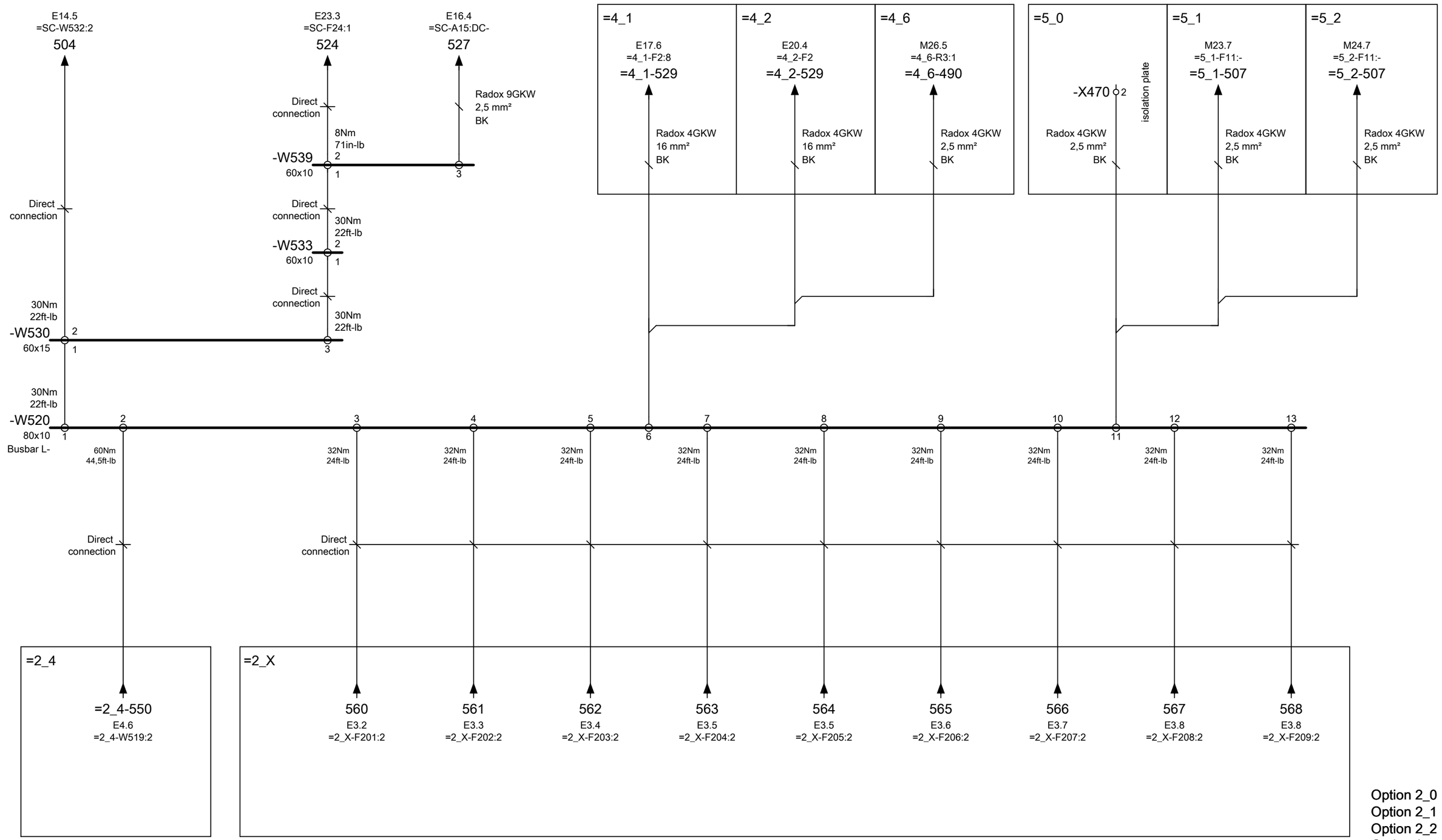

Option 2_0
Option 2_1
Option 2_2
Option 2_4
Option 4_1
option 4_2
Option 4_6
Option 5_0
Option 5_1
Option 5_2

Manufacturing : Cable Radox 2.5mm² 4GKW-AX must be installed seperately at option 4_5! The terminal =SC-X470 is not used at option 5_1 and 5_2.

			Date	07.04.2011	Sunny Central 720-CP-10	SMA	SMA Solar Technology AG D-34266 Niestetal +49 (0)561 - 9522 - 0	DC Power supply Minus	SC-720-CP-10:A	SC-720-CP-10 &EFS E6
			Author	R.Branz						
			Checked	J.Bader						
Modification	Date	Name	Origin		Replacement of	Replaced by				SC-720-CP-10-CEN110910

1	2	3	4	5	6	7	8	9	10

=SC

=A1

9 x 200A Fuse DC

-F101 200A	-F102 200A	-F103 200A	-F104 200A	-F105 200A	-F106 200A	-F107 200A	-F108 200A	-F109 200A
-F201 200A	-F202 200A	-F203 200A	-F204 200A	-F205 200A	-F206 200A	-F207 200A	-F208 200A	-F209 200A

=A2

9 x 250A Fuse DC

-F101 250A	-F102 250A	-F103 250A	-F104 250A	-F105 250A	-F106 250A	-F107 250A	-F108 250A	-F109 250A
-F201 250A	-F202 250A	-F203 250A	-F204 250A	-F205 250A	-F206 250A	-F207 250A	-F208 250A	-F209 250A

=A3

7 x 315A Fuse DC

-F101 315A	-F102 315A	-F103 315A	-F104 315A	-F105 315A	-F106 315A	-F107 315A
-F201 315A	-F202 315A	-F203 315A	-F204 315A	-F205 315A	-F206 315A	-F207 315A

=A4

6 x 400A Fuse DC

-F101 400A	-F102 400A	-F103 400A	-F104 400A	-F105 400A	-F106 400A
-F201 400A	-F202 400A	-F203 400A	-F204 400A	-F205 400A	-F206 400A

=A5

9 x 125A Fuse DC

-F101 125A	-F102 125A	-F103 125A	-F104 125A	-F105 125A	-F106 125A	-F107 125A	-F108 125A	-F109 125A
-F201 125A	-F202 125A	-F203 125A	-F204 125A	-F205 125A	-F206 125A	-F207 125A	-F208 125A	-F209 125A

=A6

9 x 160A Fuse DC

-F101 160A	-F102 160A	-F103 160A	-F104 160A	-F105 160A	-F106 160A	-F107 160A	-F108 160A	-F109 160A
-F201 160A	-F202 160A	-F203 160A	-F204 160A	-F205 160A	-F206 160A	-F207 160A	-F208 160A	-F209 160A

1	2	3	4	5	6	7	8	9	10

=SC

=B1

9 x 200A Fuse DC

-F101 200A, -F102 200A, -F103 200A, -F104 200A, -F105 200A, -F106 200A, -F107 200A, -F108 200A, -F109 200A

-F201 Gr. 3 disconnecting blades, -F202 Gr. 3 disconnecting blades, -F203 Gr. 3 disconnecting blades, -F204 Gr. 3 disconnecting blades, -F205 Gr. 3 disconnecting blades, -F206 Gr. 3 disconnecting blades, -F207 Gr. 3 disconnecting blades, -F208 Gr. 3 disconnecting blades, -F209 Gr. 3 disconnecting blades

=B2

9 x 250A Fuse DC

-F101 250A, -F102 250A, -F103 250A, -F104 250A, -F105 250A, -F106 250A, -F107 250A, -F108 250A, -F109 250A

-F201 Gr. 3 disconnecting blades, -F202 Gr. 3 disconnecting blades, -F203 Gr. 3 disconnecting blades, -F204 Gr. 3 disconnecting blades, -F205 Gr. 3 disconnecting blades, -F206 Gr. 3 disconnecting blades, -F207 Gr. 3 disconnecting blades, -F208 Gr. 3 disconnecting blades, -F209 Gr. 3 disconnecting blades

=B3

7 x 315A Fuse DC

-F101 315A, -F102 315A, -F103 315A, -F104 315A, -F105 315A, -F106 315A, -F107 315A

-F201 Gr. 3 disconnecting blades, -F202 Gr. 3 disconnecting blades, -F203 Gr. 3 disconnecting blades, -F204 Gr. 3 disconnecting blades, -F205 Gr. 3 disconnecting blades, -F206 Gr. 3 disconnecting blades, -F207 Gr. 3 disconnecting blades

=B4

6 x 400A Fuse DC

-F101 400A, -F102 400A, -F103 400A, -F104 400A, -F105 400A, -F106 400A

-F201 Gr. 3 disconnecting blades, -F202 Gr. 3 disconnecting blades, -F203 Gr. 3 disconnecting blades, -F204 Gr. 3 disconnecting blades, -F205 Gr. 3 disconnecting blades, -F206 Gr. 3 disconnecting blades

=B5

9 x 125A Fuse DC

-F101 125A, -F102 125A, -F103 125A, -F104 125A, -F105 125A, -F106 125A, -F107 125A, -F108 125A, -F109 125A

-F201 Gr. 3 disconnecting blades, -F202 Gr. 3 disconnecting blades, -F203 Gr. 3 disconnecting blades, -F204 Gr. 3 disconnecting blades, -F205 Gr. 3 disconnecting blades, -F206 Gr. 3 disconnecting blades, -F207 Gr. 3 disconnecting blades, -F208 Gr. 3 disconnecting blades, -F209 Gr. 3 disconnecting blades

=B6

9 x 160A Fuse DC

-F101 160A, -F102 160A, -F103 160A, -F104 160A, -F105 160A, -F106 160A, -F107 160A, -F108 160A, -F109 160A

-F201 Gr. 3 disconnecting blades, -F202 Gr. 3 disconnecting blades, -F203 Gr. 3 disconnecting blades, -F204 Gr. 3 disconnecting blades, -F205 Gr. 3 disconnecting blades, -F206 Gr. 3 disconnecting blades, -F207 Gr. 3 disconnecting blades, -F208 Gr. 3 disconnecting blades, -F209 Gr. 3 disconnecting blades

			Date	07.04.2011	Sunny Central 720-CP-10	SMA Solar Technology AG D-34266 Niestetal +49 (0)561 - 9522 - 0	=2_1_fuses positiv disconnentig blades negativ and options 3_X	SC-720-CP-10:A	SC-720-CP-10 &EFS E8
			Author	R.Branz					
			Checked	J.Bader					
Modification	Date	Name	Origin		Replacement of	Replaced by		SC-720-CP-10-CEN110910	

1	2	3	4	5	6	7	8	9	10

=SC

=C1

9 x 200A Fuse DC

-F101 Gr. 3 disconnecting blade	-F102 Gr. 3 disconnecting blade	-F103 Gr. 3 disconnecting blade	-F104 Gr. 3 disconnecting blade	-F105 Gr. 3 disconnecting blade	-F106 Gr. 3 disconnecting blade	-F107 Gr. 3 disconnecting blade	-F108 Gr. 3 disconnecting blade	-F109 Gr. 3 disconnecting blade
-F201 200A	-F202 200A	-F203 200A	-F204 200A	-F205 200A	-F206 200A	-F207 200A	-F208 200A	-F209 200A

=C2

9 x 250A Fuse DC

-F101 Gr. 3 disconnecting blade	-F102 Gr. 3 disconnecting blade	-F103 Gr. 3 disconnecting blade	-F104 Gr. 3 disconnecting blade	-F105 Gr. 3 disconnecting blade	-F106 Gr. 3 disconnecting blade	-F107 Gr. 3 disconnecting blade	-F108 Gr. 3 disconnecting blade	-F109 Gr. 3 disconnecting blade
-F201 250A	-F202 250A	-F203 250A	-F204 250A	-F205 250A	-F206 250A	-F207 250A	-F208 250A	-F209 250A

=C3

7 x 315A Fuse DC

-F101 Gr. 3 disconnecting blade	-F102 Gr. 3 disconnecting blade	-F103 Gr. 3 disconnecting blade	-F104 Gr. 3 disconnecting blade	-F105 Gr. 3 disconnecting blade	-F106 Gr. 3 disconnecting blade	-F107 Gr. 3 disconnecting blade
-F201 315A	-F202 315A	-F203 315A	-F204 315A	-F205 315A	-F206 315A	-F207 315A

=C4

6 x 400A Fuse DC

-F101 Gr. 3 disconnecting blade	-F102 Gr. 3 disconnecting blade	-F103 Gr. 3 disconnecting blade	-F104 Gr. 3 disconnecting blade	-F105 Gr. 3 disconnecting blade	-F106 Gr. 3 disconnecting blade
-F201 400A	-F202 400A	-F203 400A	-F204 400A	-F205 400A	-F206 400A

=C5

9 x 125A Fuse DC

-F101 Gr. 3 disconnecting blade	-F102 Gr. 3 disconnecting blade	-F103 Gr. 3 disconnecting blade	-F104 Gr. 3 disconnecting blade	-F105 Gr. 3 disconnecting blade	-F106 Gr. 3 disconnecting blade	-F107 Gr. 3 disconnecting blade	-F108 Gr. 3 disconnecting blade	-F109 Gr. 3 disconnecting blade
-F201 125A	-F202 125A	-F203 125A	-F204 125A	-F205 125A	-F206 125A	-F207 125A	-F208 125A	-F209 125A

=C6

9 x 160A Fuse DC

-F101 Gr. 3 disconnecting blade	-F102 Gr. 3 disconnecting blade	-F103 Gr. 3 disconnecting blade	-F104 Gr. 3 disconnecting blade	-F105 Gr. 3 disconnecting blade	-F106 Gr. 3 disconnecting blade	-F107 Gr. 3 disconnecting blade	-F108 Gr. 3 disconnecting blade	-F109 Gr. 3 disconnecting blade
-F201 160A	-F202 160A	-F203 160A	-F204 160A	-F205 160A	-F206 160A	-F207 160A	-F208 160A	-F209 160A

1	2	3	4	5	6	7	8	9	10

=SC

DC-Switch-disconnector

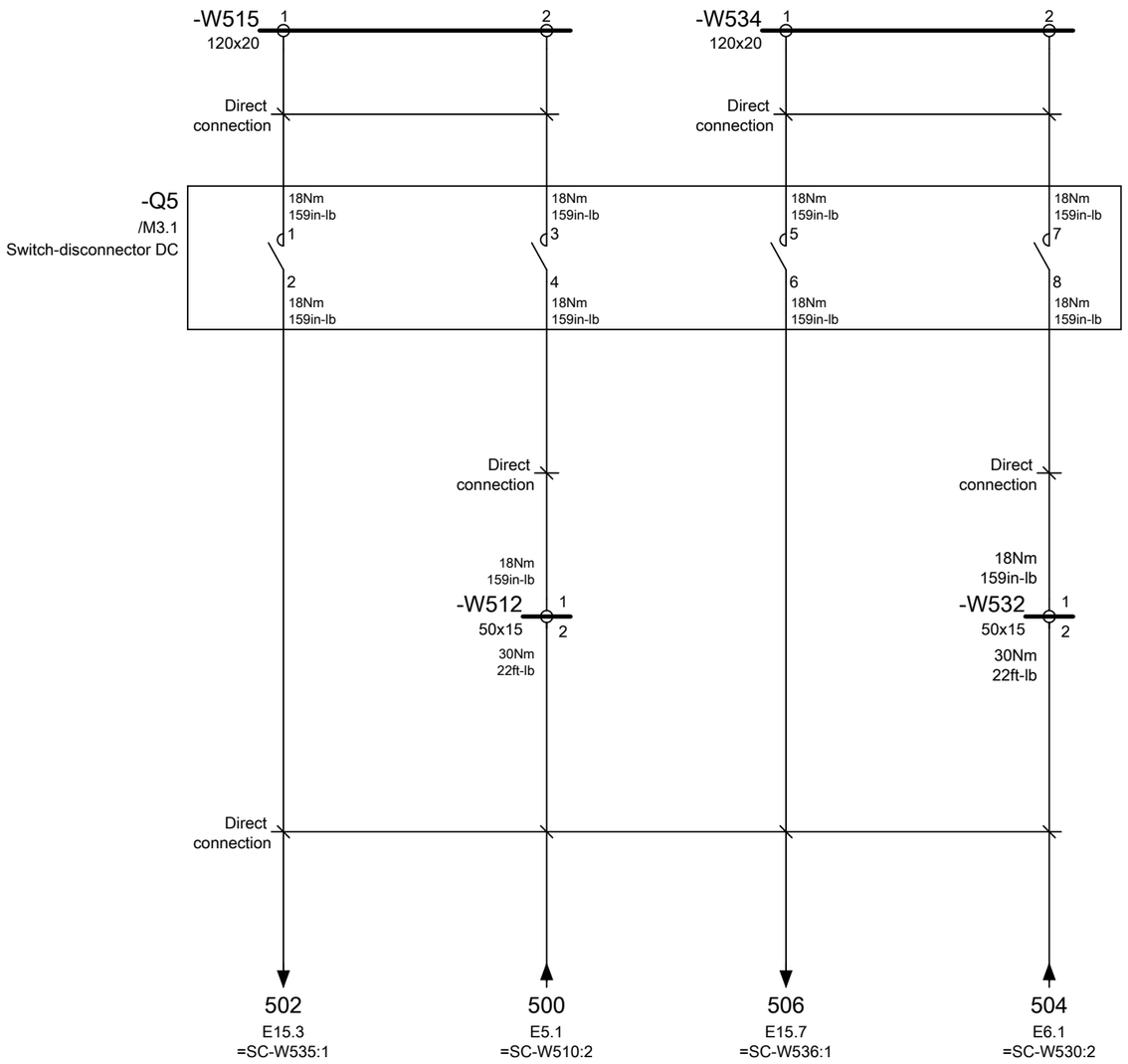

Standard

			Date	07.04.2011	Sunny Central 720-CP-10	SMA	SMA Solar Technology AG D-34266 Niestetal +49 (0)561 - 9522 - 0	DC Switch-disconnector	SC-720-CP-10:A	SC-720-CP-10 &EFS
			Author	R.Branz						E14
			Checked	J.Bader						SC-720-CP-10-CEN110910
Modification	Date	Name	Origin		Replacement of	Replaced by				

1	2	3	4	5	6	7	8	9	10

=SC

Current measurement DC

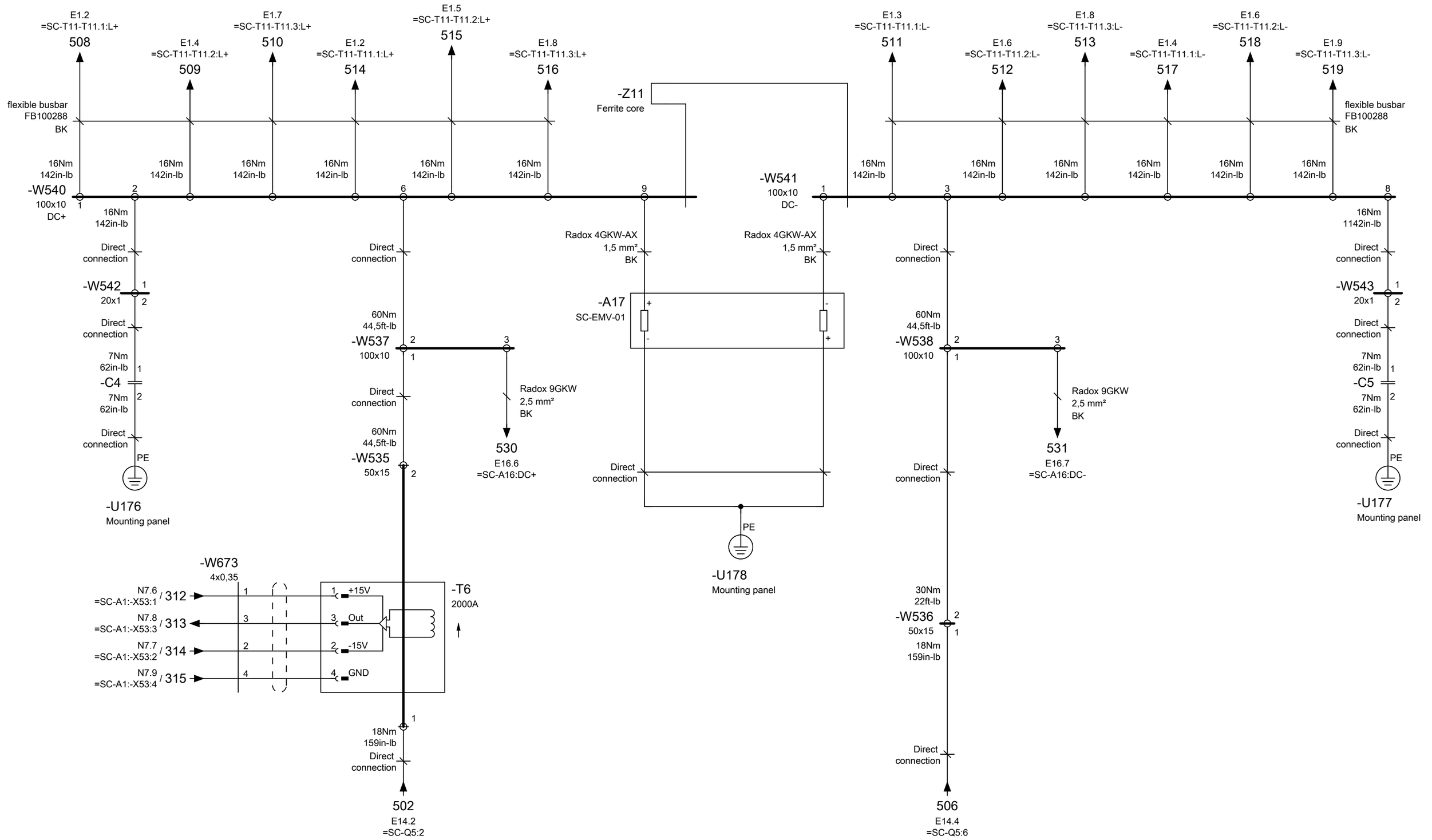

Manufacturing :

Double heat shrink tubing on busbar under the current transformer =SC-T6

Standard

			Date	07.04.2011	Sunny Central 720-CP-10	SMA	SMA Solar Technology AG D-34266 Niestetal +49 (0)561 - 9522 - 0	Current measurement DC	SC-720-CP-10:A	SC-720-CP-10	&EFS
			Author	R.Branz							E15
			Checked	J.Bader						SC-720-CP-10-CEN110910	
Modification	Date	Name	Origin		Replacement of	Replaced by					

1	2	3	4	5	6	7	8	9	10
=SC	Voltage measurement U_PV				Voltage measurement U_ZWK				

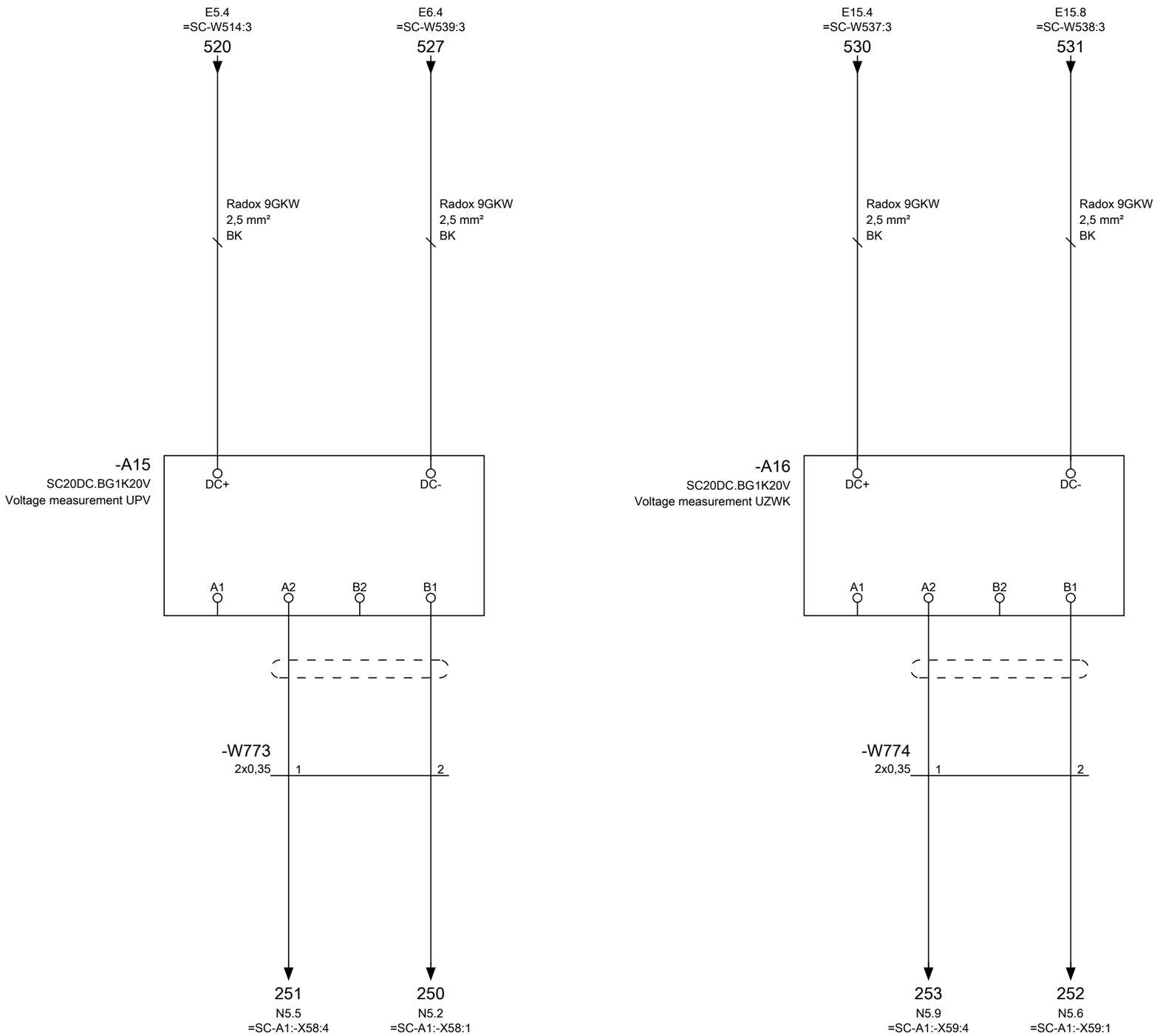

Standard

			Date	07.04.2011	Sunny Central 720-CP-10	SMA Solar Technology AG D-34266 Niestetal +49 (0)561 - 9522 - 0	Voltage measurement DC	SC-720-CP-10:A	SC-720-CP-10 &EFS E16
			Author	R.Branz					
			Checked	J.Bader					
Modification	Date	Name	Origin		Replacement of	Replaced by		SC-720-CP-10-CEN110910	

1	2	3	4	5	6	7	8	9	10

=SC

=4_0-X30 = Grounding Option 4_0

GFDI (ground fault detection indicator)
Minus grounded

GFDI (ground fault detection indicator)
Plus grounded

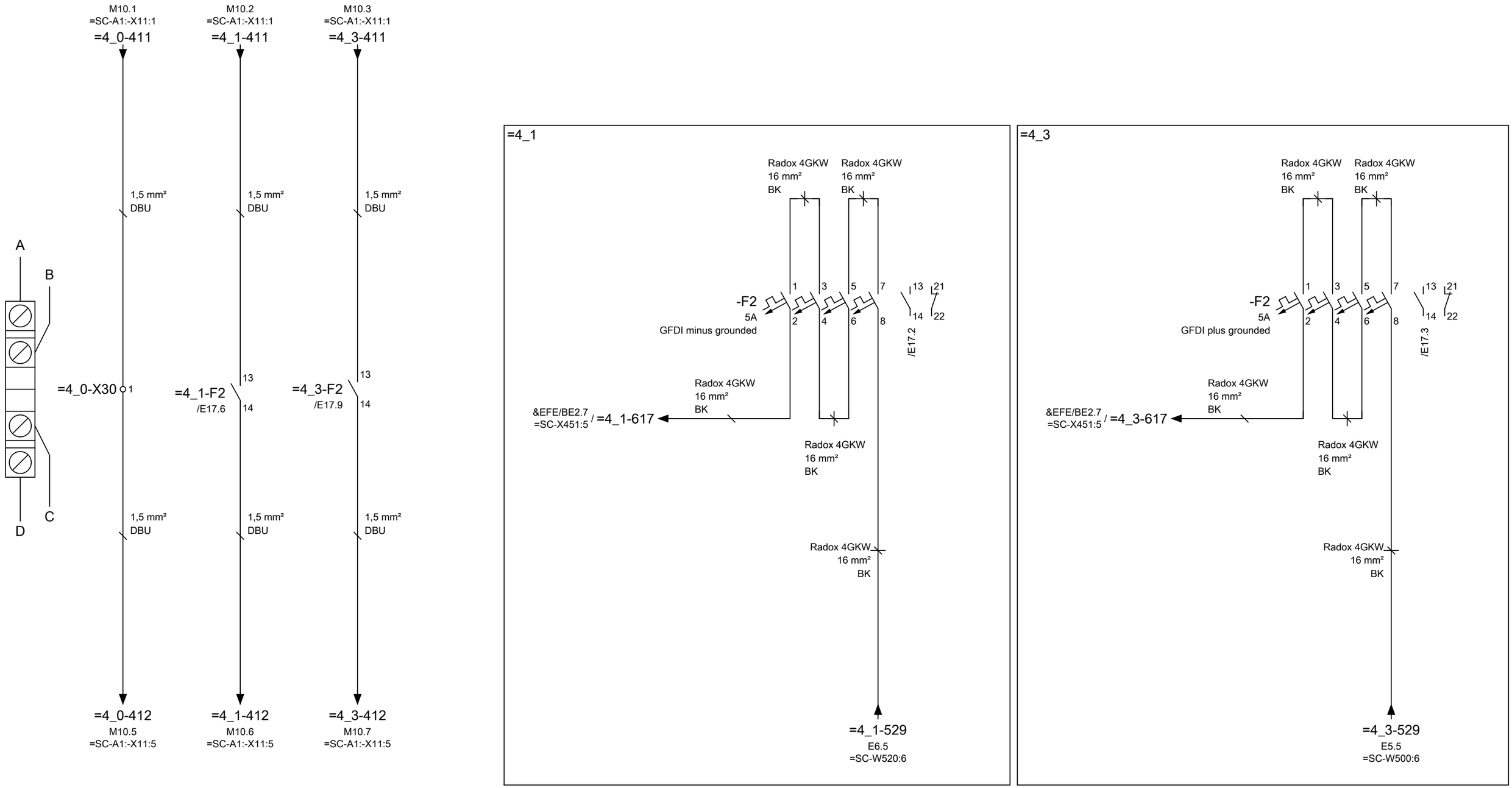

Manufacturing :
Pay attention to the correct allocation of the connection contacts: Circuit breaker GFDI =SC-F2
Terminal =4_0-X30 is not used at option =4_1, 4_2, 4_3, 4_4, 4_5, 4_6

Option 4_0
Option 4_1
Option 4_3

			Date	07.04.2011	Sunny Central 720-CP-10	SMA	SMA Solar Technology AG D-34266 Niestetal +49 (0)561 - 9522 - 0	GFDI fuse monitoring	SC-720-CP-10:A	SC-720-CP-10	&EFS
			Author	R.Branz							E17
			Checked	J.Bader						SC-720-CP-10-CEN110910	
Modification	Date	Name	Origin		Replacement of	Replaced by					

1	2	3	4	5	6	7	8	9	10

=SC

-X410 = Control voltage External

=4_2-X411 = Control voltage External

=4_4-X411 = Control voltage External

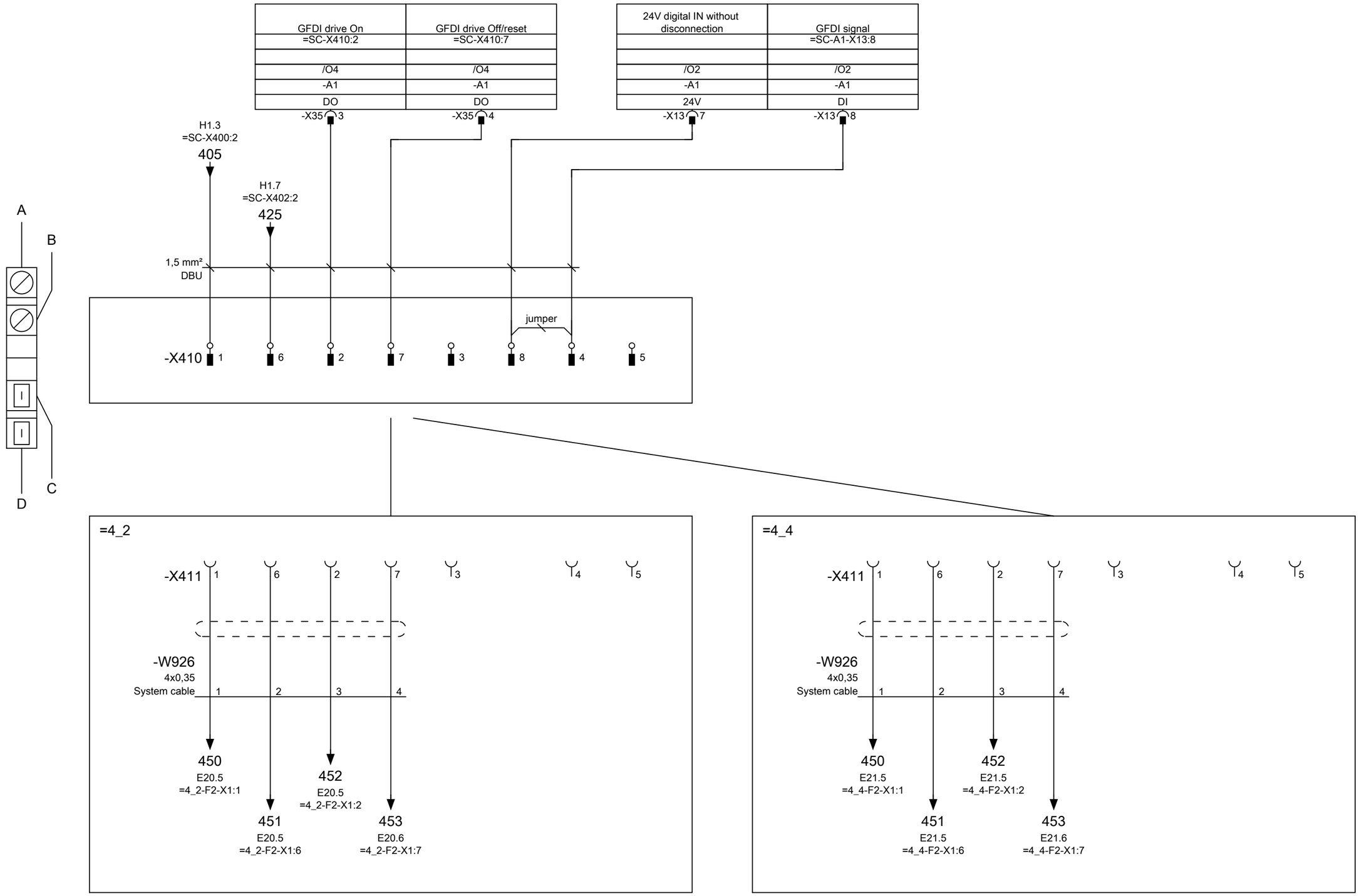

Standard
Option 4_2
Option 4_4

			Date	07.04.2011	Sunny Central 720-CP-10	SMA	SMA Solar Technology AG D-34266 Niestetal +49 (0)561 - 9522 - 0	GFDI fuse monitoring Option 4_2 , 4_4	SC-720-CP-10:A	SC-720-CP-10 &EFS E18
			Author	R.Branz						
			Checked	J.Bader						
Modification	Date	Name	Origin		Replacement of	Replaced by			SC-720-CP-10-CEN110910	

1	2	3	4	5	6	7	8	9	10

=4_2

=4_2-F2-X1 = motor drive GFDI

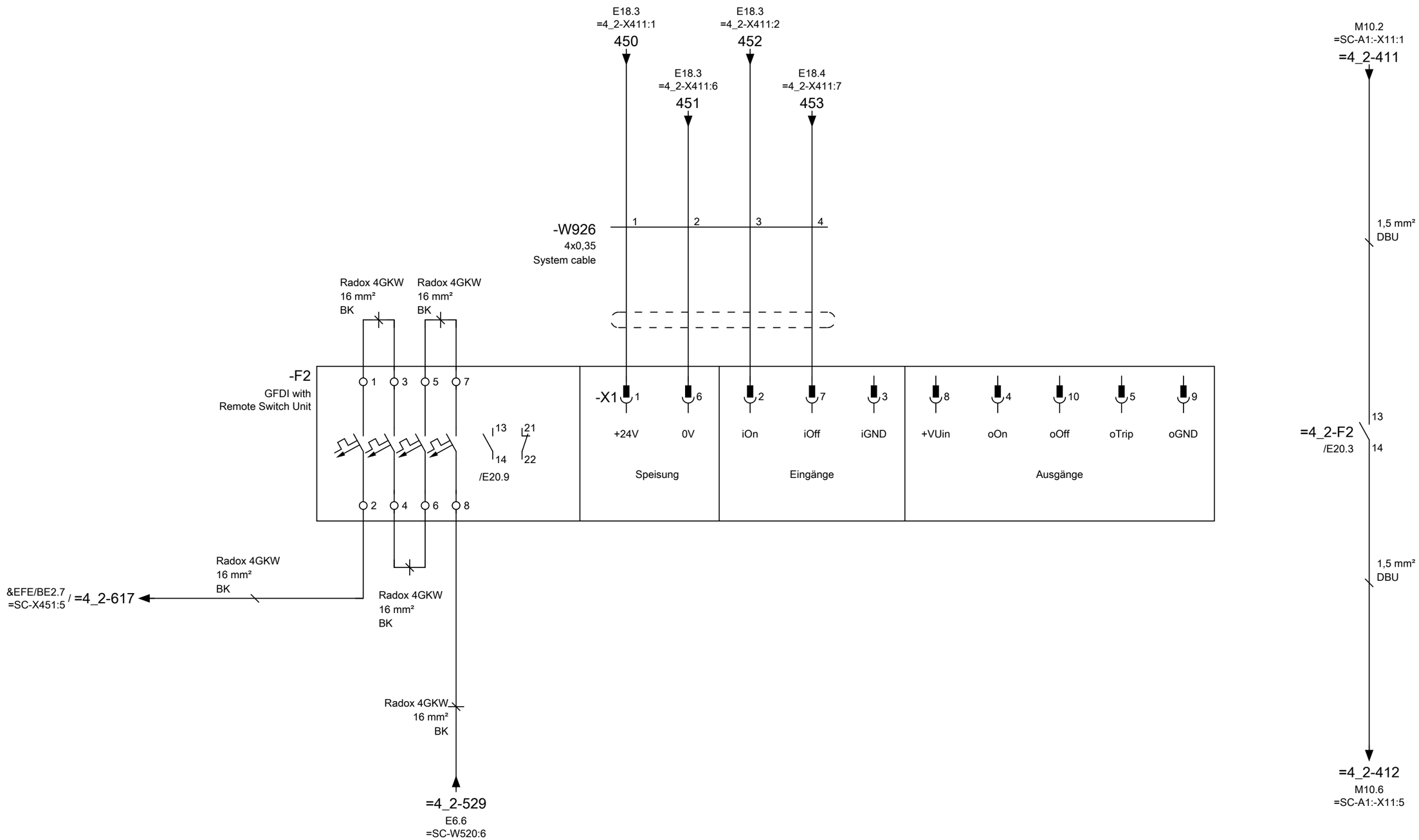

Manufacturing :
Pay attention to the correct allocation of the connection contacts: Circuit breaker GFDI =SC-F2
Terminal =4_0-X30 is not used at option =4_1, 4_2, 4_3, 4_4, 4_5, 4_6

Option 4_2

			Date	07.04.2011	Sunny Central 720-CP-10	SMA	SMA Solar Technology AG D-34266 Niestetal +49 (0)561 - 9522 - 0	GFDI fuse monitoring	SC-720-CP-10:A	SC-720-CP-10	&EFS
			Author	R.Branz							E20
			Checked	J.Bader							
Modification	Date	Name	Origin		Replacement of	Replaced by				SC-720-CP-10-CEN110910	

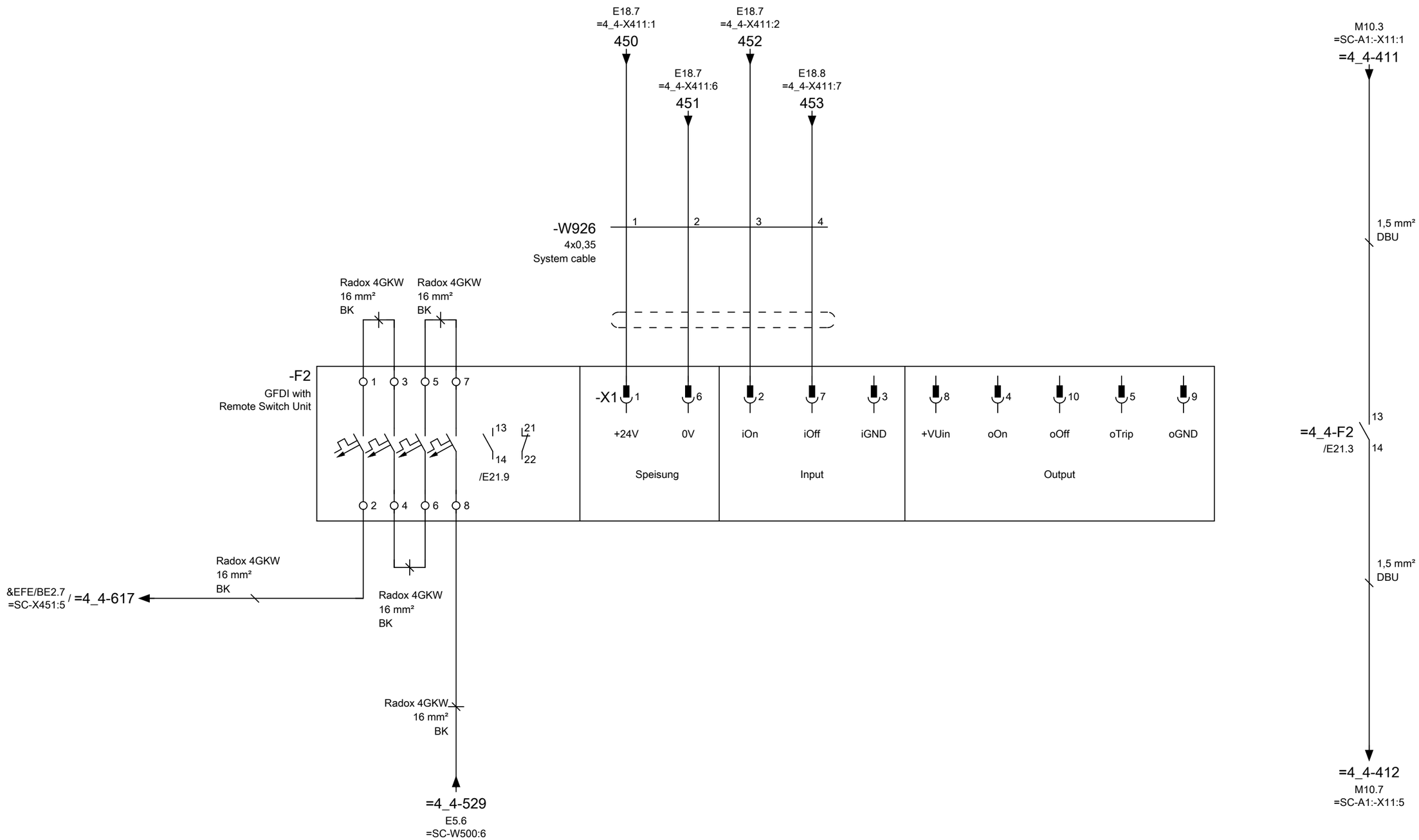

Manufacturing :
Pay attention to the correct allocation of the connection contacts: Circuit breaker GFDI =SC-F2
Terminal =4_0-X30 is not used at option =4_1, 4_2, 4_3, 4_4, 4_5, 4_6

Option 4_4

1	2	3	4	5	6	7	8	9	10
=SC	Softgrounding				Softgrounding				
	Plus grounded				Minus grounded				

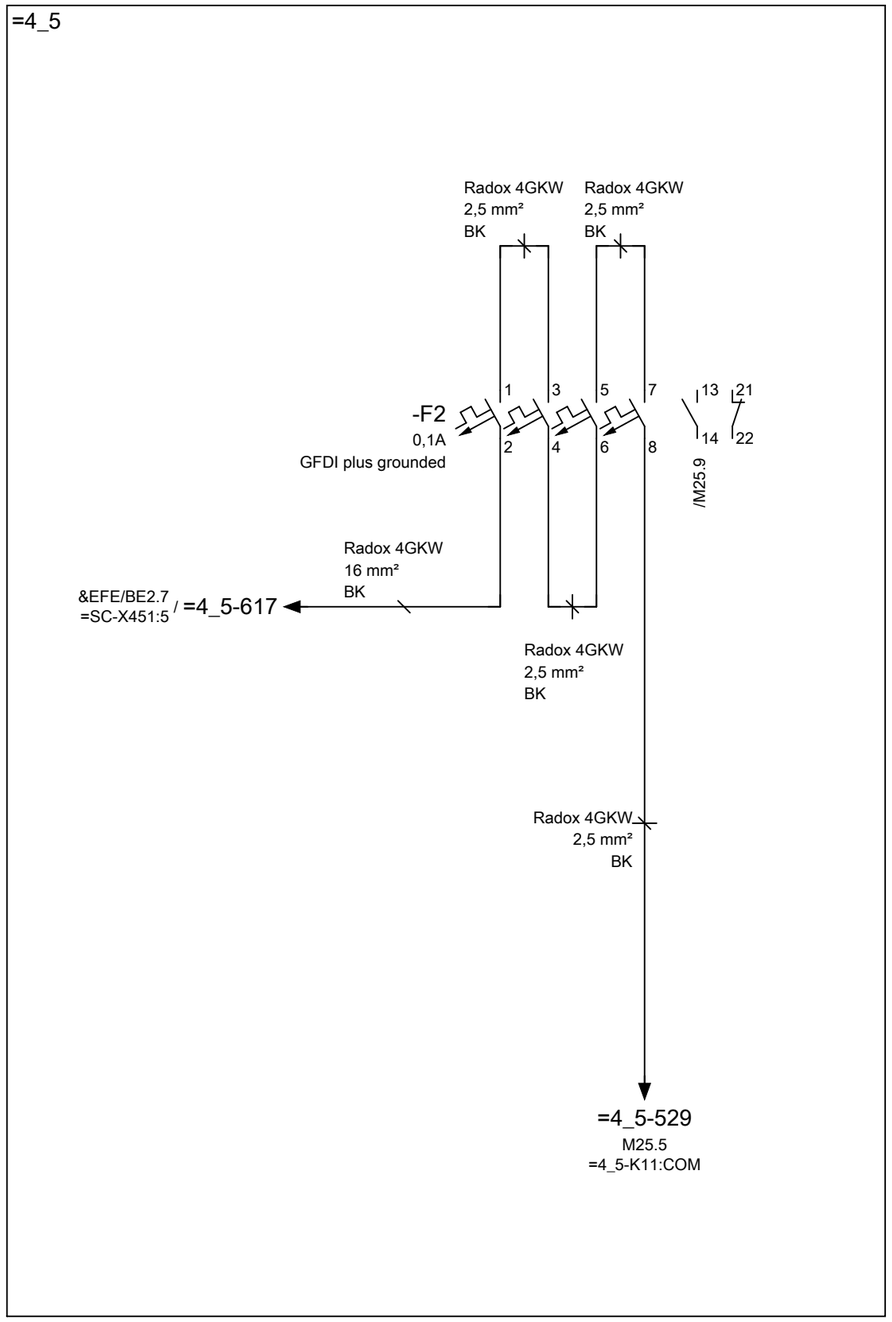

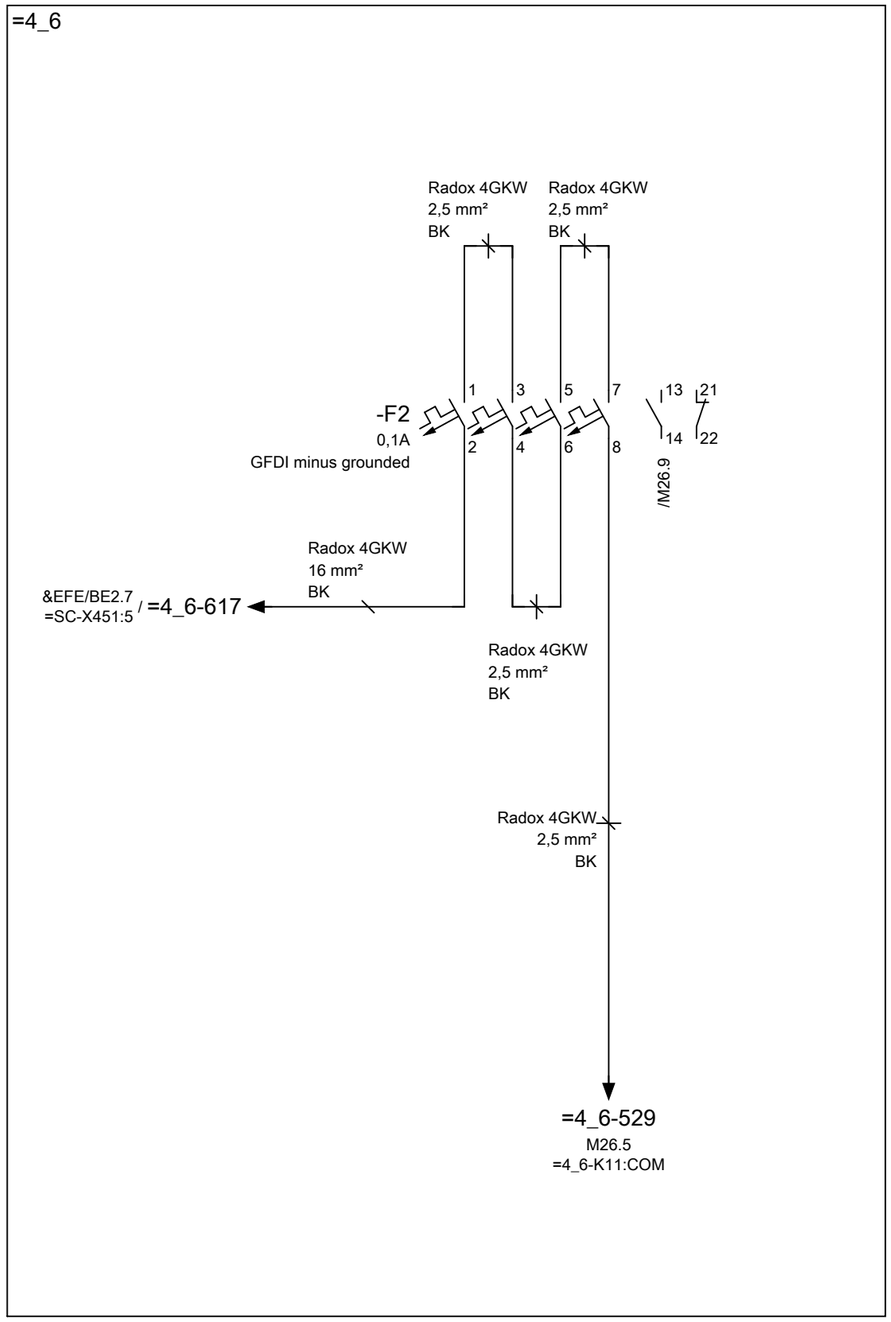

Manufacturing :
Pay attention to the correct allocation of the connection contacts: Circuit breaker GFDI =SC-F2
Terminal =4_0-X30 is not used at option =4_1, 4_2, 4_3, 4_4, 4_5, 4_6

Option 4_5
Option 4_6

			Date	07.04.2011	Sunny Central 720-CP-10	SMA	SMA Solar Technology AG D-34266 Niestetal +49 (0)561 - 9522 - 0	GFDI fuse monitoring Option 4_5 , 4_6	SC-720-CP-10:A	SC-720-CP-10	&EFS
			Author	R.Branz							E22
			Checked	J.Bader							
Modification	Date	Name	Origin		Replacement of	Replaced by				SC-720-CP-10-CEN110910	

1	2	3	4	5	6	7	8	9	10
=SC	Discharger	Discharger							
	DC +	DC -							

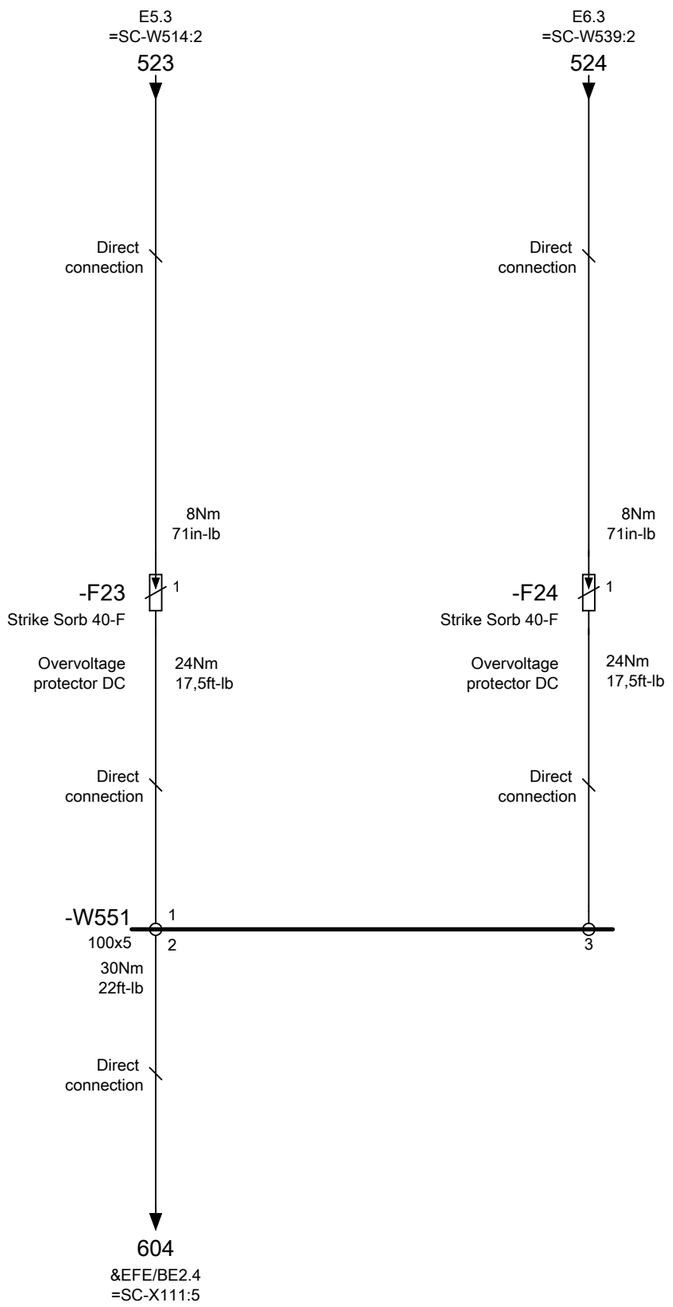

Standard

			Date	07.04.2011	Sunny Central 720-CP-10	SMA	SMA Solar Technology AG D-34266 Niestetal +49 (0)561 - 9522 - 0	Overvoltage protector DC	SC-720-CP-10:A	SC-720-CP-10	&EFS
			Author	R.Branz							E23
			Checked	J.Bader							
Modification	Date	Name	Origin		Replacement of	Replaced by				SC-720-CP-10-CEN110910	

1	2	3	4	5	6	7	8	9	10
=SC	-X210 = Control voltage External				Overvoltage contactor				
					control voltage				

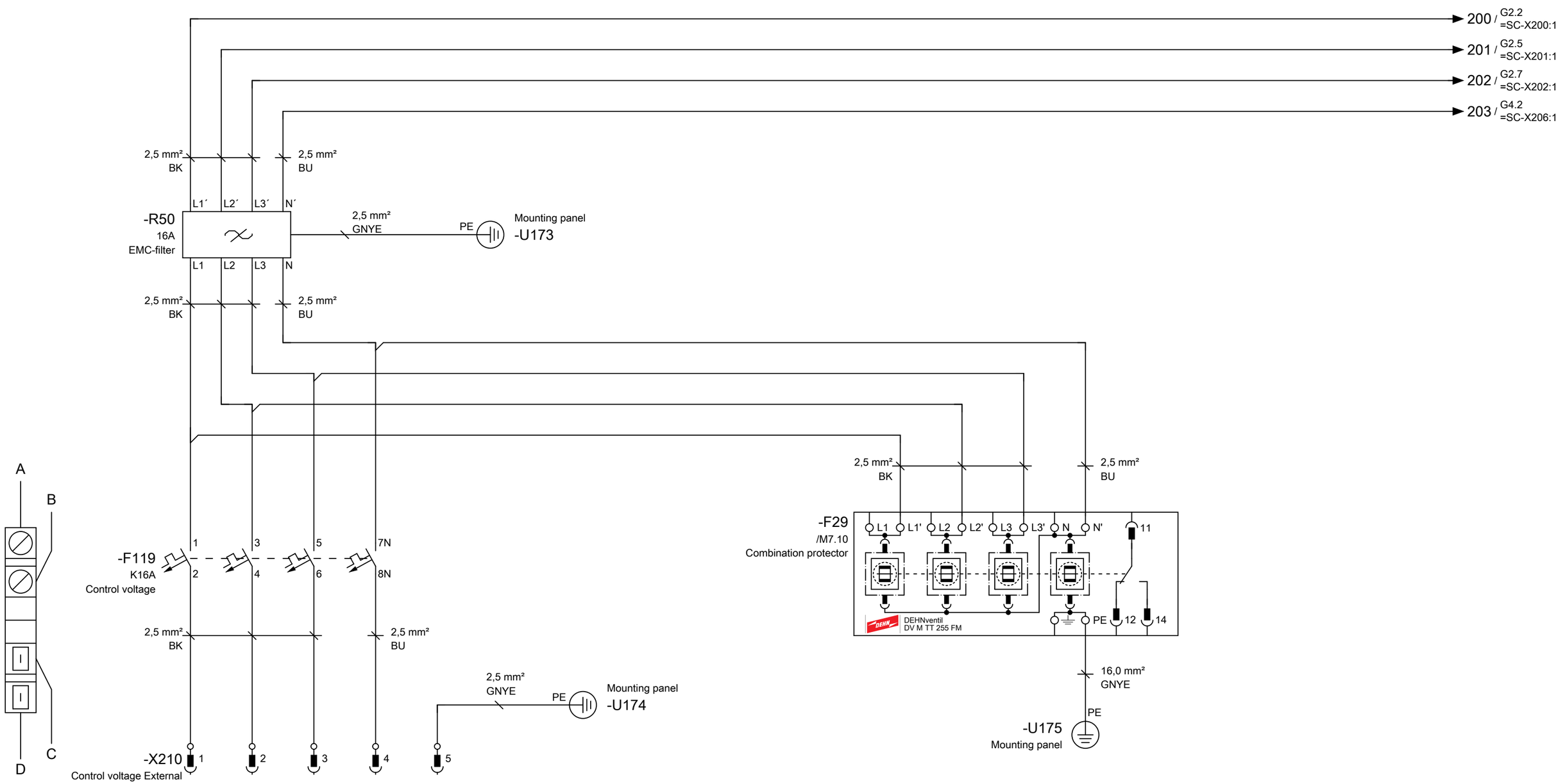

			Date	07.04.2011	Sunny Central 720-CP-10	SMA Solar Technology AG D-34266 Niestetal +49 (0)561 - 9522 - 0	External Control voltage AC	SC-720-CP-10:A	SC-720-CP-10	Standard &EFS
			Author	R.Branz						G1
			Checked	J.Bader						
Modification	Date	Name	Origin		Replacement of	Replaced by			SC-720-CP-10-CEN110910	

1	2	3	4	5	6	7	8	9	10
=SC	-X200 = Control voltage 21L1			-X201 = Control voltage 21L2			-X202 = Control voltage 21L3		

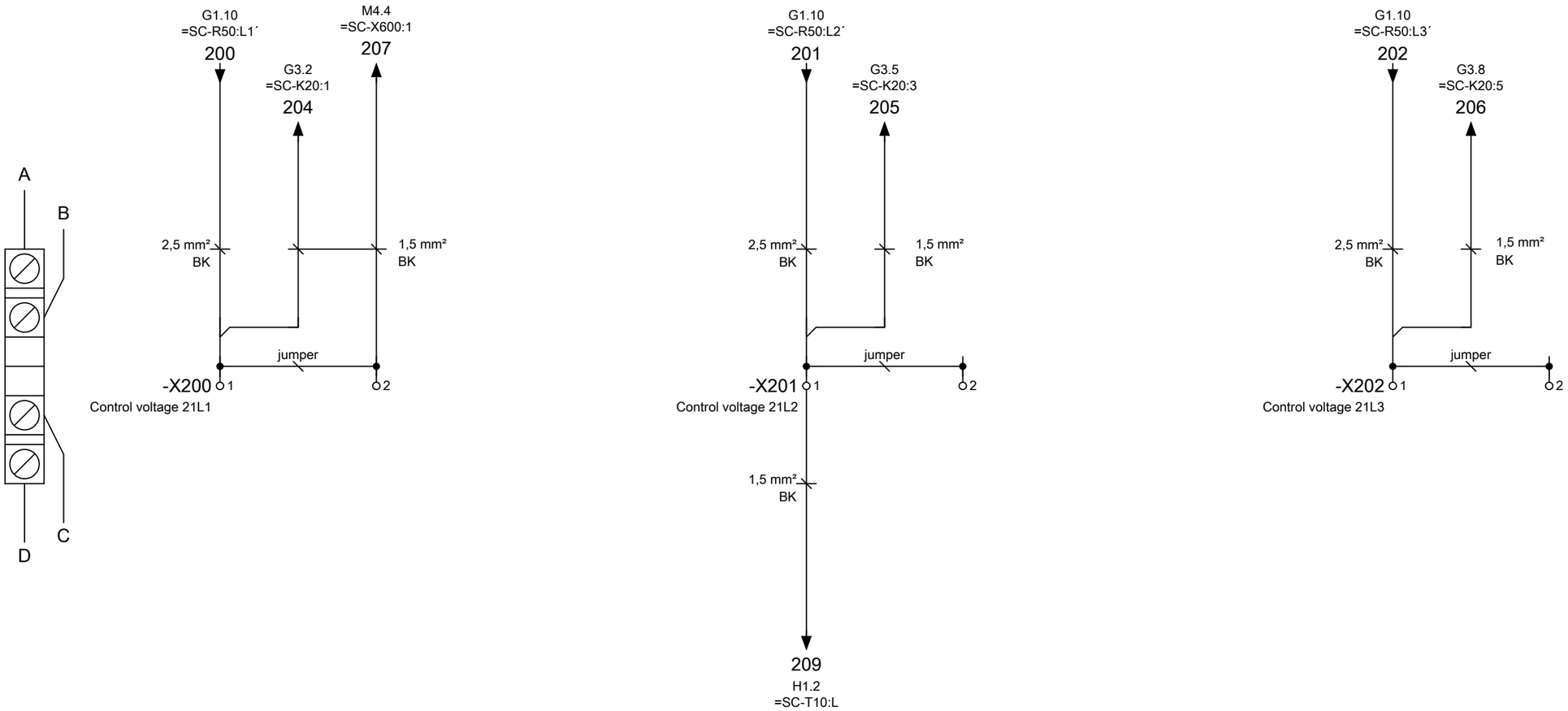

Standard

			Date	07.04.2011	Sunny Central 720-CP-10	SMA Solar Technology AG D-34266 Niestetal +49 (0)561 - 9522 - 0	Control voltage AC X200,X201,X202	SC-720-CP-10:A	SC-720-CP-10	&EFS
			Author	R.Branz						G2
			Checked	J.Bader						
Modification	Date	Name	Origin		Replacement of	Replaced by			SC-720-CP-10-CEN110910	

1	2	3	4	5	6	7	8	9	10

=SC

-X203 = Control voltage 22L1 | -X204 = Control voltage 22L2 | -X205 = Control voltage 22L3

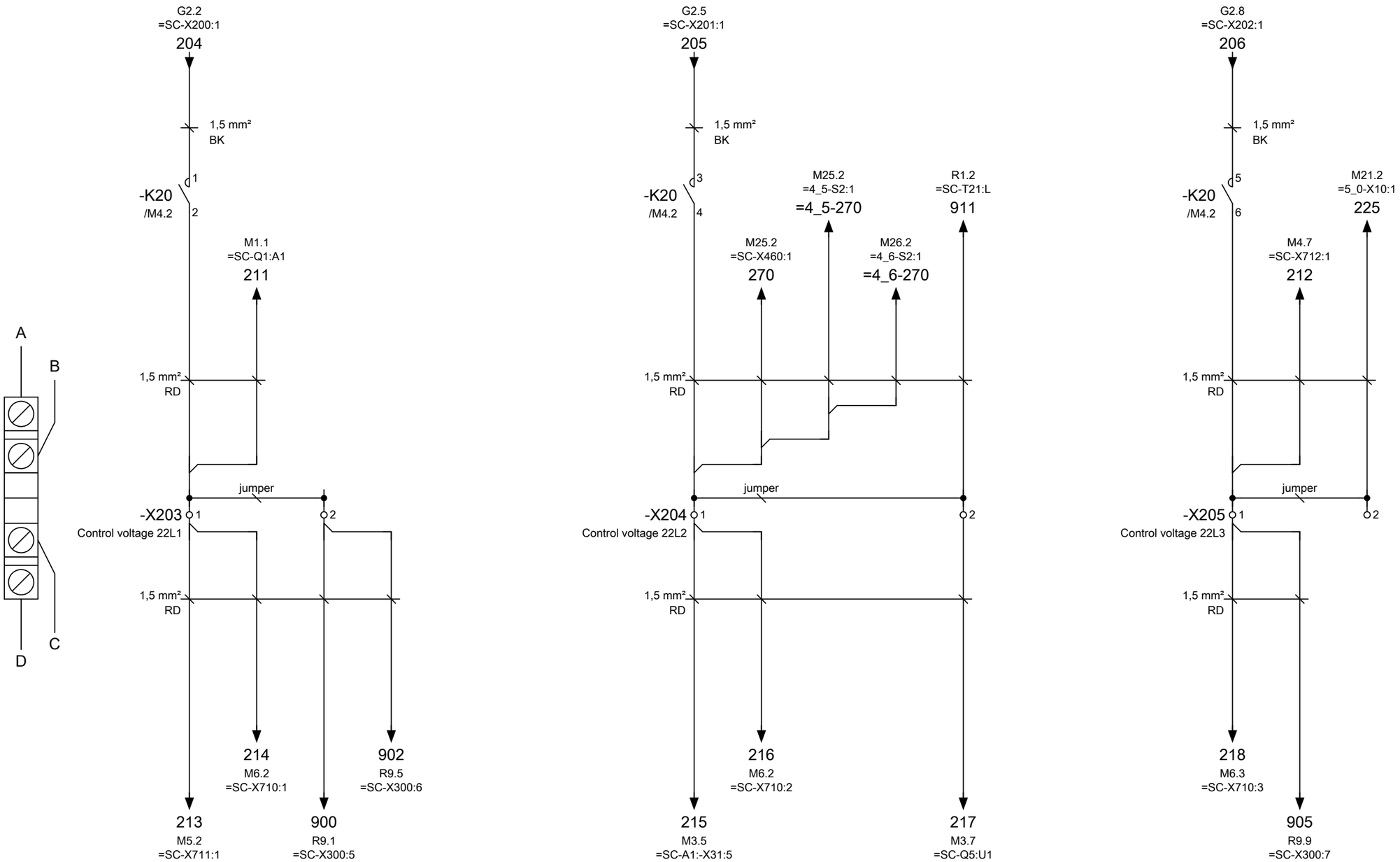

Standard
Option 4_5
Option 4_6

			Date	07.04.2011	Sunny Central 720-CP-10	SMA Solar Technology AG D-34266 Niestetal +49 (0)561 - 9522 - 0	Control voltage AC X203,X204,X205	SC-720-CP-10:A	SC-720-CP-10	&EFS
			Author	R.Branz						G3
			Checked	J.Bader						
Modification	Date	Name	Origin		Replacement of	Replaced by			SC-720-CP-10-CEN110910	

1	2	3	4	5	6	7	8	9	10

=SC

-X206 = Control voltage 21N

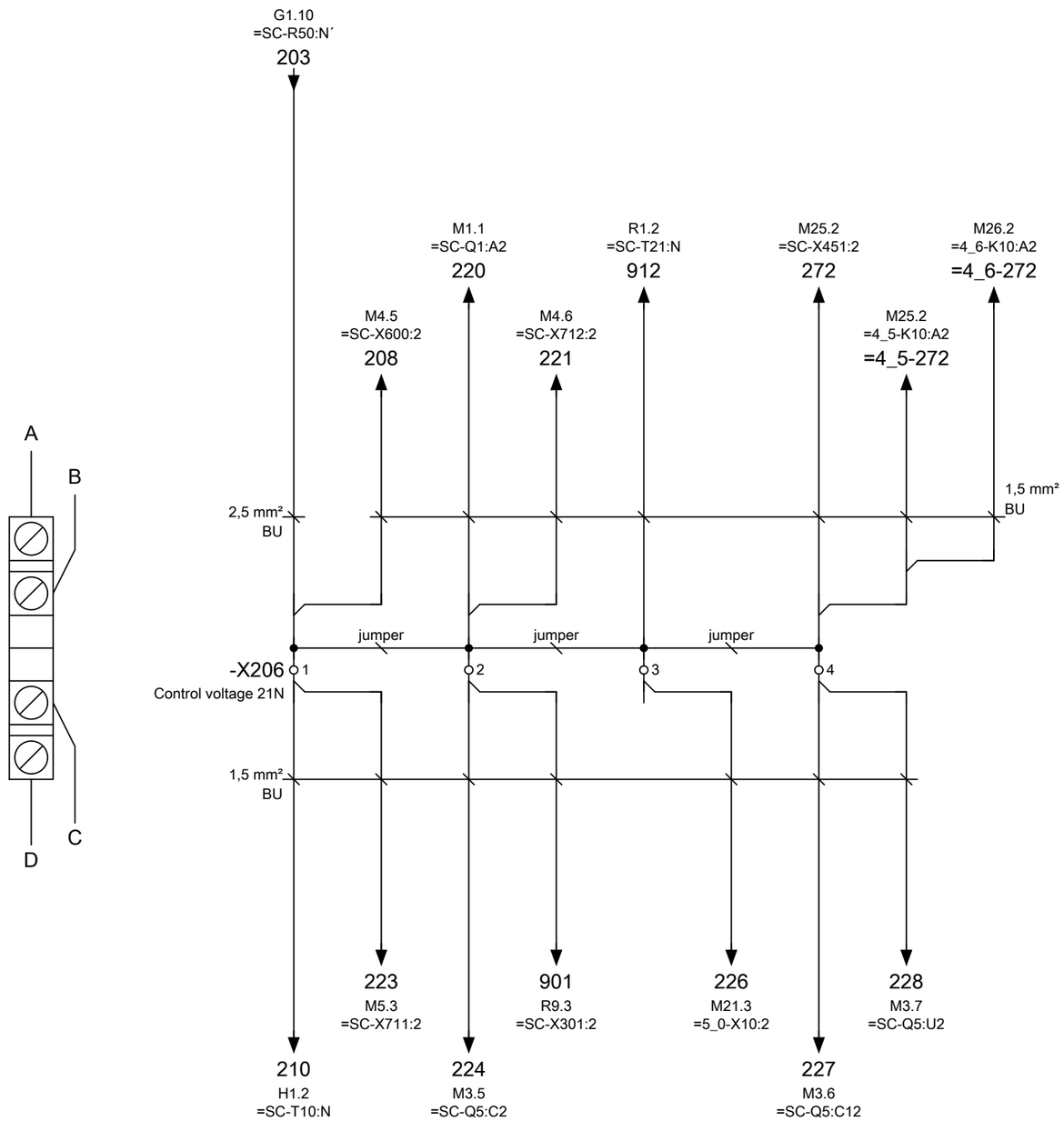

Standard
Option 4_5
Option 4_6

			Date	07.04.2011	Sunny Central 720-CP-10	SMA Solar Technology AG D-34266 Niestetal +49 (0)561 - 9522 - 0	Control voltage AC X206	SC-720-CP-10:A	SC-720-CP-10	&EFS
			Author	R.Branz						G4
			Checked	J.Bader						
Modification	Date	Name	Origin		Replacement of	Replaced by			SC-720-CP-10-CEN110910	

1	2	3	4	5	6	7	8	9	10
=SC	-X400 = Control voltage 41L+				-X402 = Control voltage 41L-				

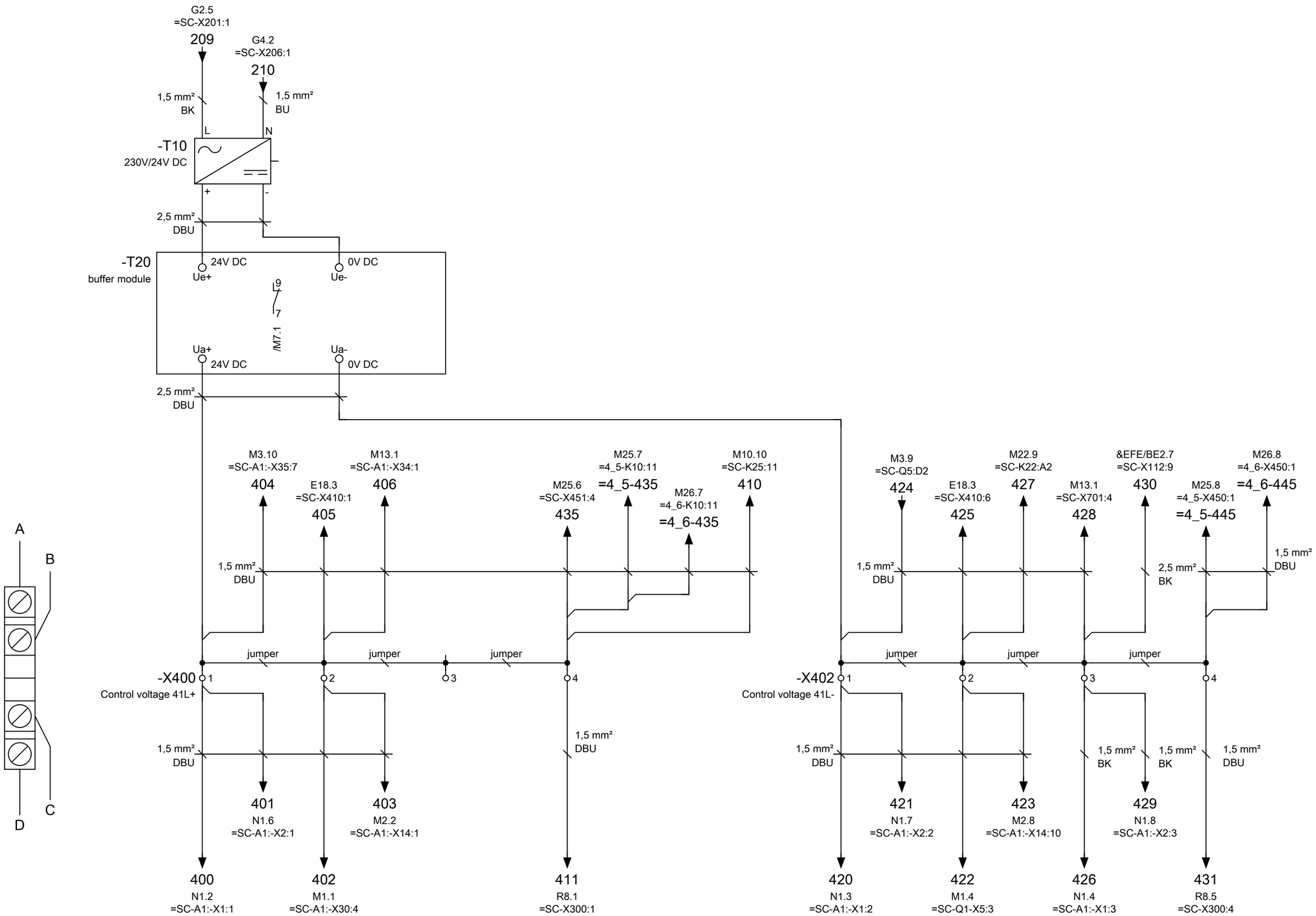

Standard
Option 4_5
Option 4_6

			Date	07.04.2011	Sunny Central 720-CP-10	SMA Solar Technology AG D-34266 Niestetal +49 (0)561 - 9522 - 0	Control voltage DC X400,X402	SC-720-CP-10:A	SC-720-CP-10	&EFS
			Author	R.Branz						H1
			Checked	J.Bader						
Modification	Date	Name	Origin		Replacement of	Replaced by			SC-720-CP-10-CEN110910	

1	2	3	4	5	6	7	8	9	10
=SC	grid contactor				Grid contactor				
	on				closed				

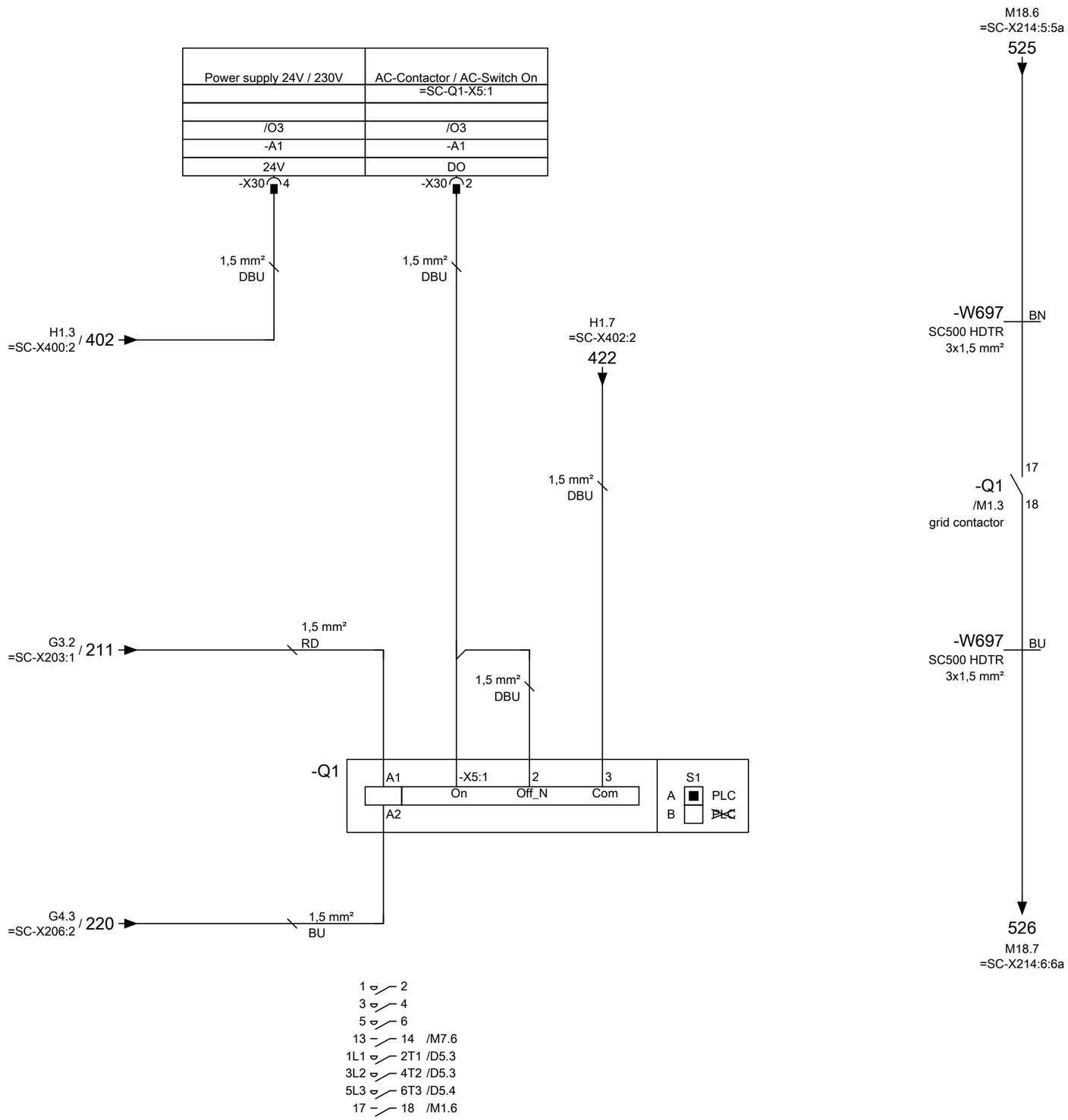

Standard

			Date	07.04.2011	Sunny Central 720-CP-10	SMA	SMA Solar Technology AG D-34266 Niestetal +49 (0)561 - 9522 - 0	Control Line contactor	SC-720-CP-10:A	SC-720-CP-10 &EFS M1
			Author	R.Branz						
			Checked	J.Bader						
Modification	Date	Name	Origin		Replacement of	Replaced by			SC-720-CP-10-CEN110910	

1	2	3	4	5	6	7	8	9	10

=SC

feedback

AC-Power circuit breaker

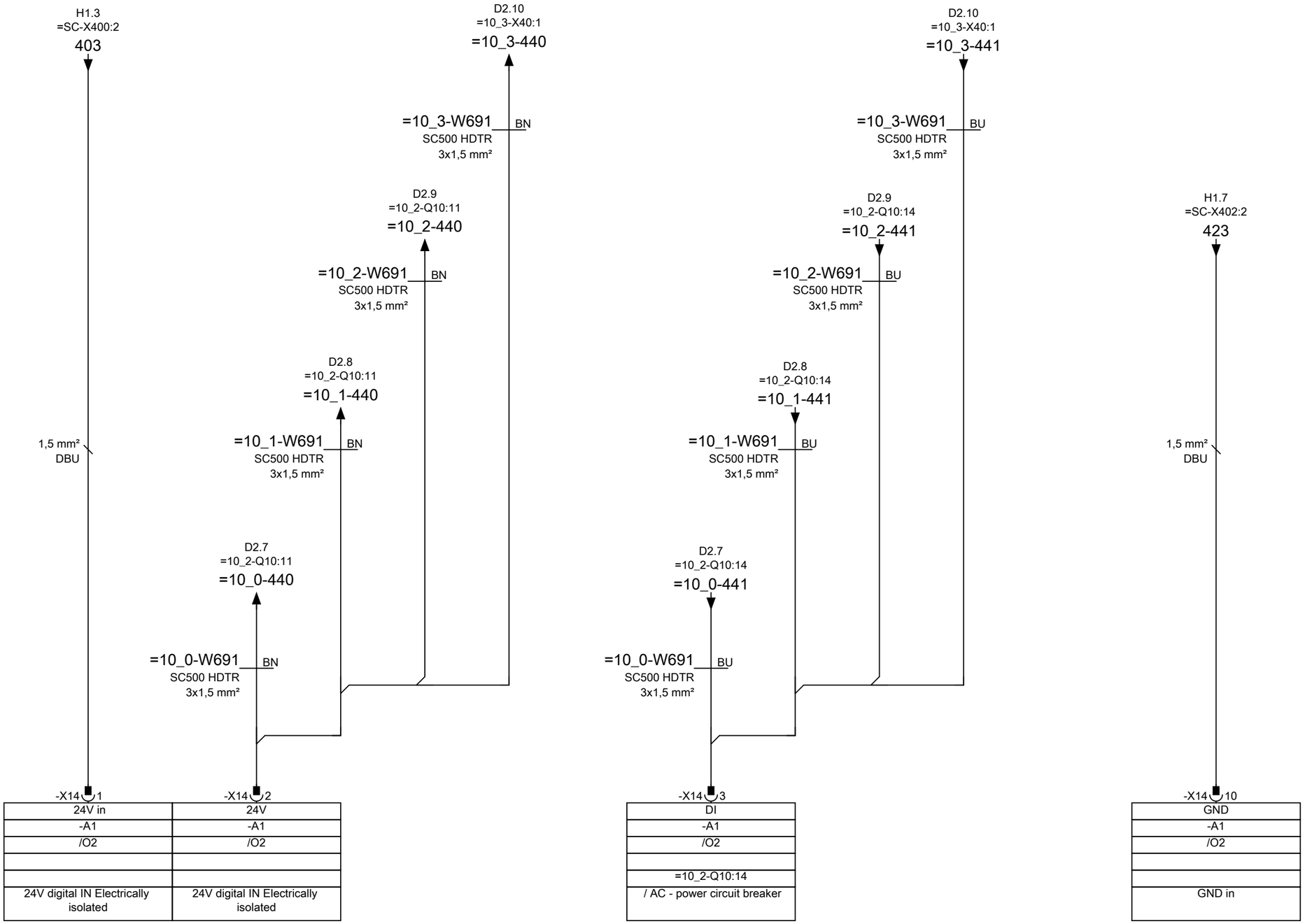

Option 10_0
Option 10_1
Option 10_2
Option 10_3

			Date	07.04.2011	Sunny Central 720-CP-10	SMA Solar Technology AG D-34266 Niestetal +49 (0)561 - 9522 - 0	Control AC-Power circuit breaker	SC-720-CP-10:A	SC-720-CP-10	&EFS
			Author	R.Branz						M2
			Checked	J.Bader						
Modification	Date	Name	Origin		Replacement of	Replaced by			SC-720-CP-10-CEN110910	

1	2	3	4	5	6	7	8	9	10
=SC	DC- Switch feedback		DC- Switch On		DC- Switch Off		DC- Switch Undervoltage coil		

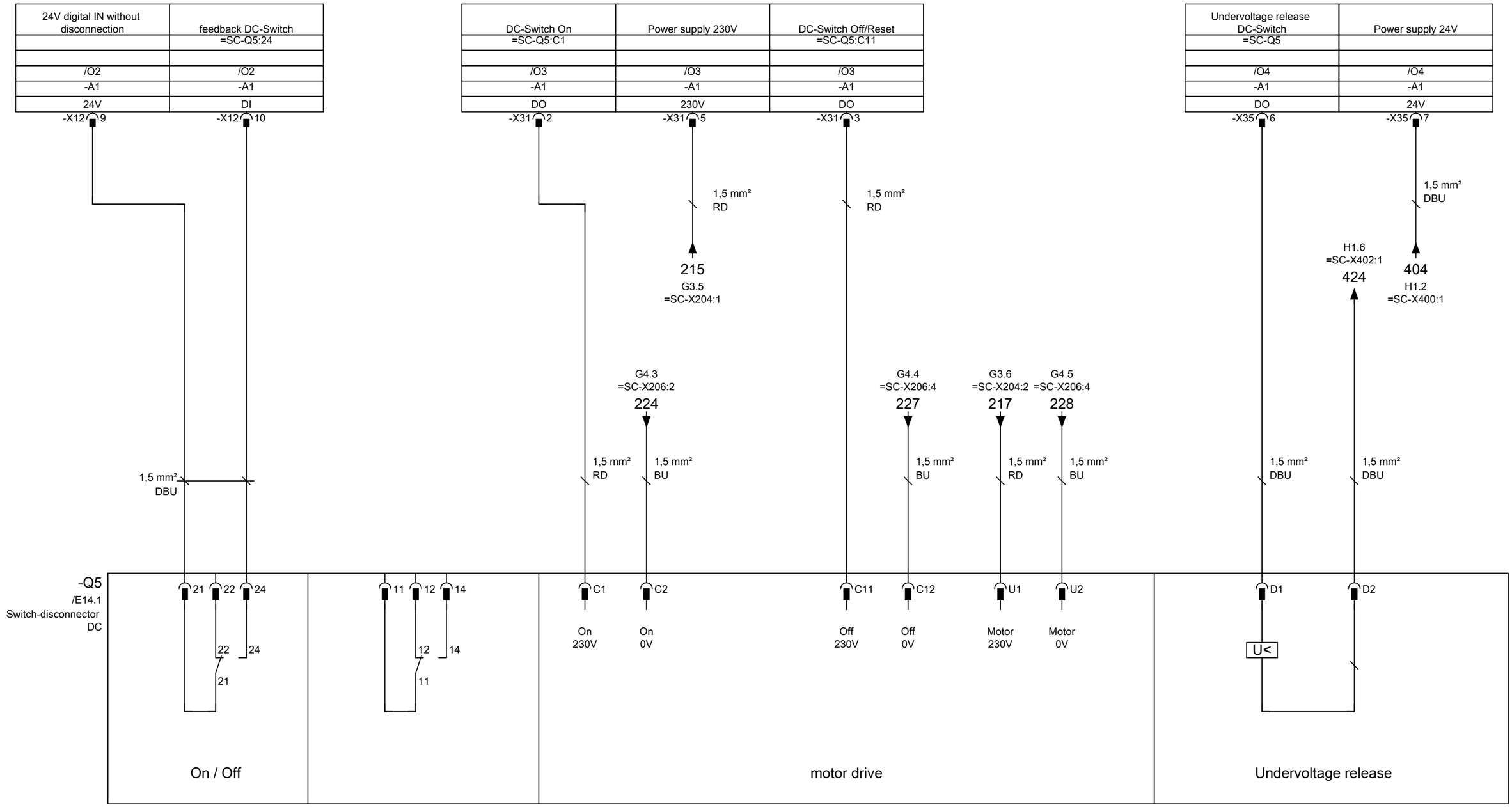

Standard

			Date	07.04.2011	Sunny Central 720-CP-10	SMA Solar Technology AG D-34266 Niestetal +49 (0)561 - 9522 - 0	Control DC Switch-disconnector	SC-720-CP-10:A	SC-720-CP-10 &EFS M3
			Author	R.Branz					
			Checked	J.Bader					
Modification	Date	Name	Origin		Replacement of	Replaced by			SC-720-CP-10-CEN110910

1	2	3	4	5	6	7	8	9	10

=SC

control — supply contactor — -X600 = interface Service 230V

control — Heating — -X712 = transfer plug Inverter Cabinet

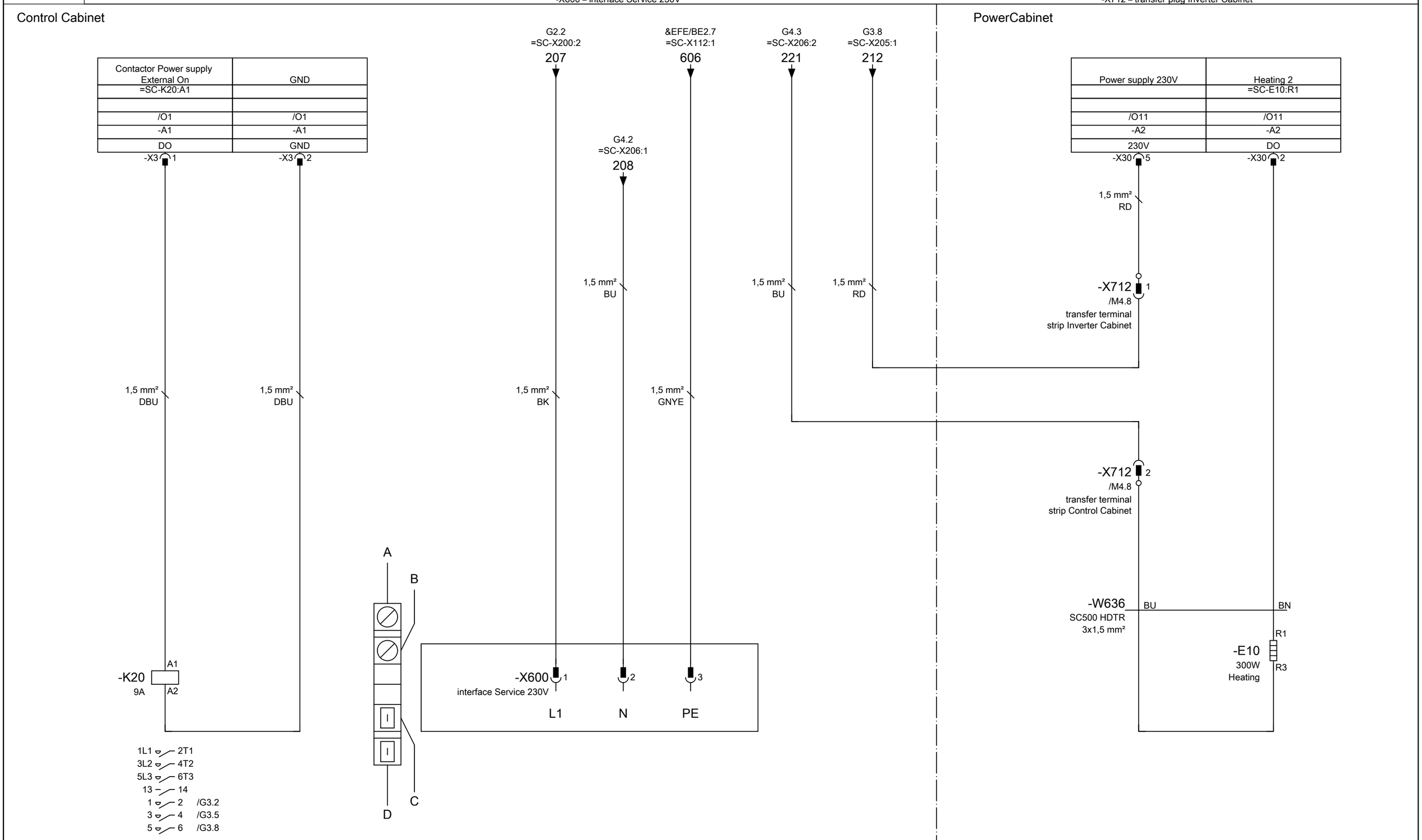

Standard

			Date	07.04.2011	Sunny Central 720-CP-10	SMA Solar Technology AG D-34266 Niestetal +49 (0)561 - 9522 - 0	Control Heating, supply contactor interface Service 230V	SC-720-CP-10:A	SC-720-CP-10 &EFS M4
			Author	R.Branz					
			Checked	J.Bader					
Modification	Date	Name	Origin		Replacement of	Replaced by		SC-720-CP-10-CEN110910	

1	2	3	4	5	6	7	8	9	10

=SC

Fan 1 | Fan 2

-X711 = transfer plug Inverter Cabinet

-X52 = Power supply Fan

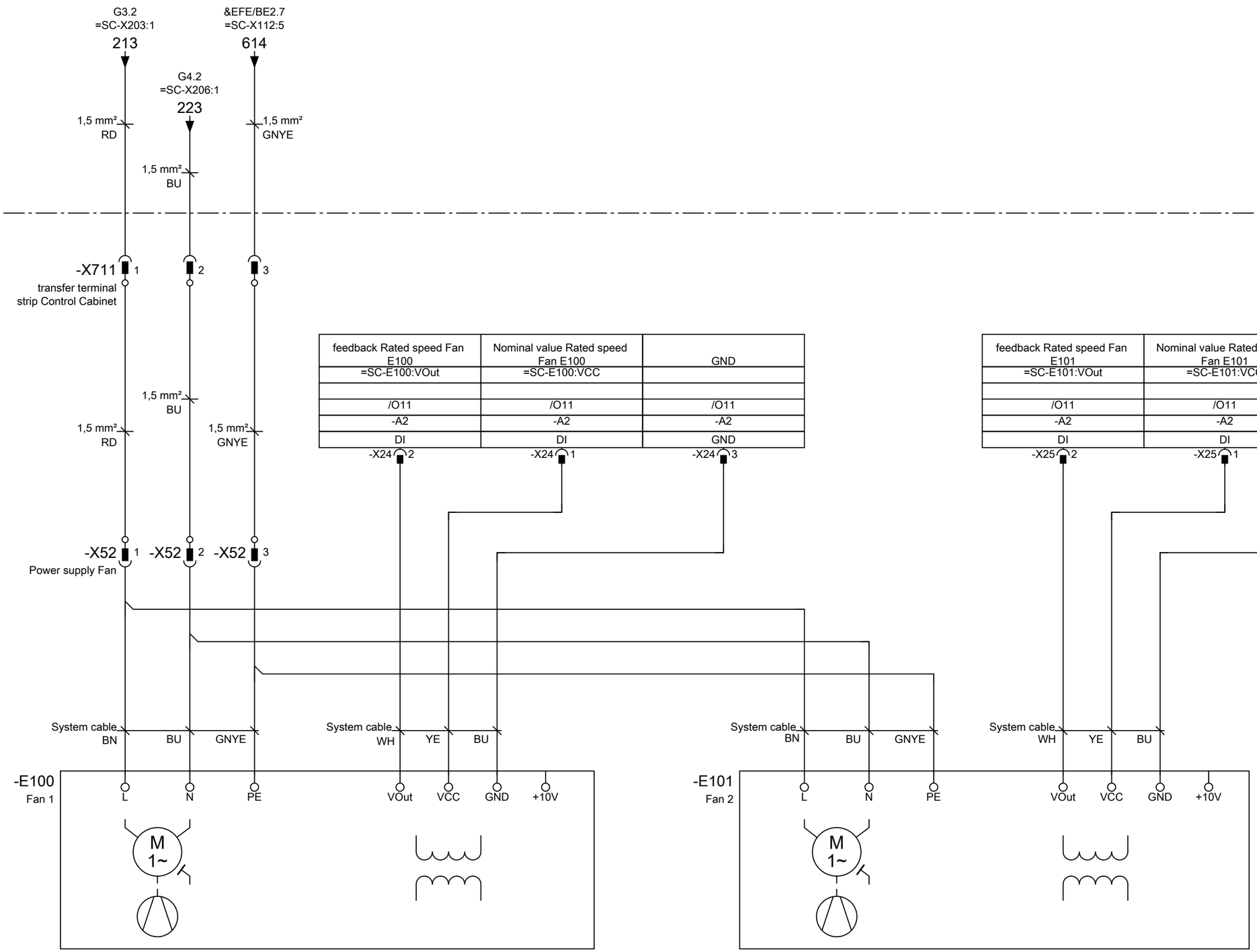

Standard

			Date	07.04.2011	Sunny Central 720-CP-10	SMA Solar Technology AG D-34266 Niestetal +49 (0)561 - 9522 - 0	Control switch cabinet fan	SC-720-CP-10:A	SC-720-CP-10 &EFS
			Author	R.Branz					M5
			Checked	J.Bader					
Modification	Date	Name	Origin		Replacement of	Replaced by		SC-720-CP-10-CEN110910	

1	2	3	4	5	6	7	8	9	10
=SC	Power supply		feedback			rotation speed setpoint			Analog speed feedback
	Fan WRB		Fan WRB			Fan WRB			Fan WRB
	-X710 = transfer plug Inverter Cabinet								

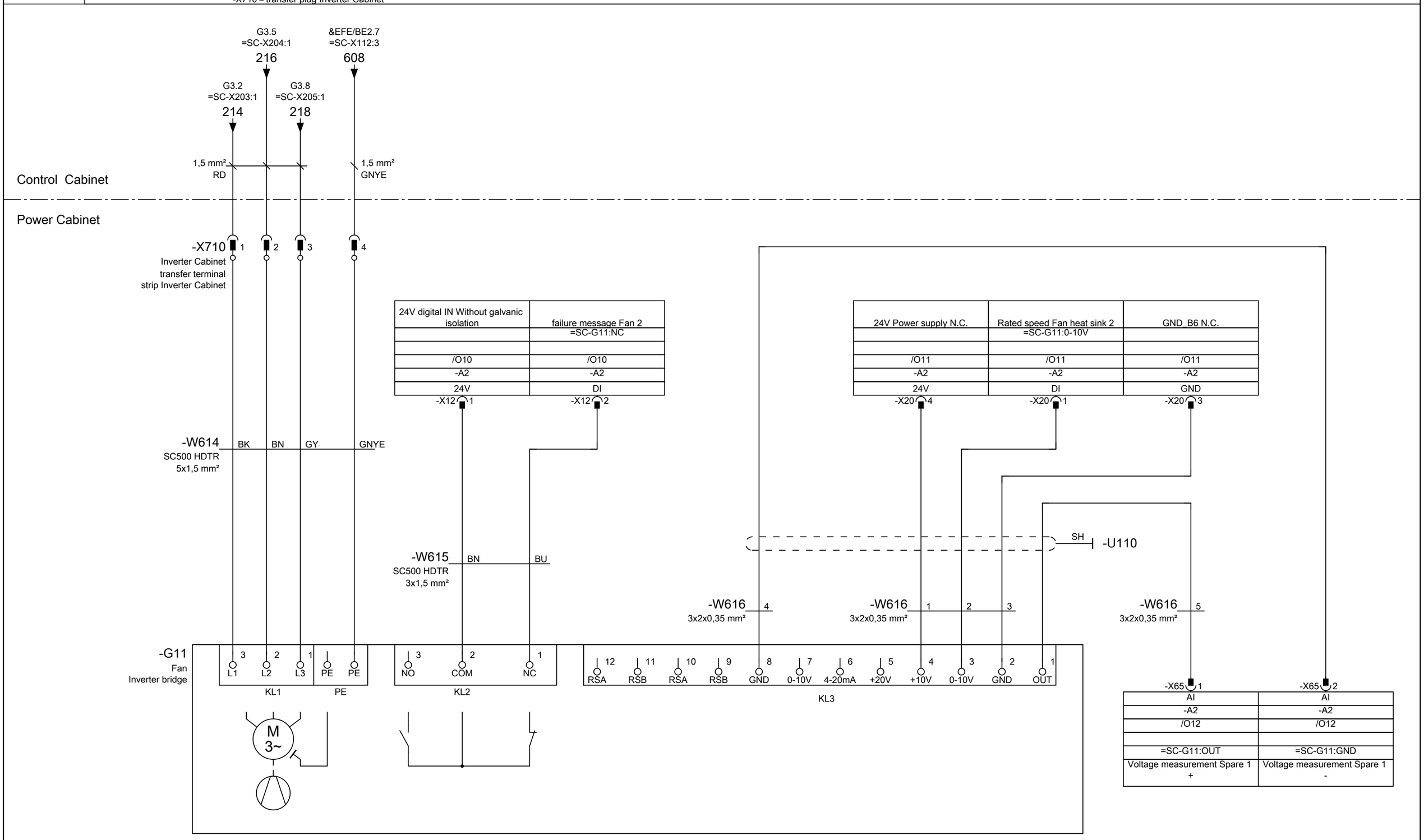

Standard

			Date	11.04.2011	Sunny Central 720-CP-10	SMA Solar Technology AG D-34266 Niestetal +49 (0)561 - 9522 - 0	Control Inverter bridge Fan	SC-720-CP-10:A	SC-720-CP-10 &EFS
			Author	R.Branz					M6
			Checked	J.Bader					
Modification	Date	Name	Origin		Replacement of	Replaced by		SC-720-CP-10-CEN110910	

1	2	3	4	5	6	7	8	9	10
=SC	Power Fail 230V		Hygrostat		feedback		Stop / start		Discharger
				Grid contactor					

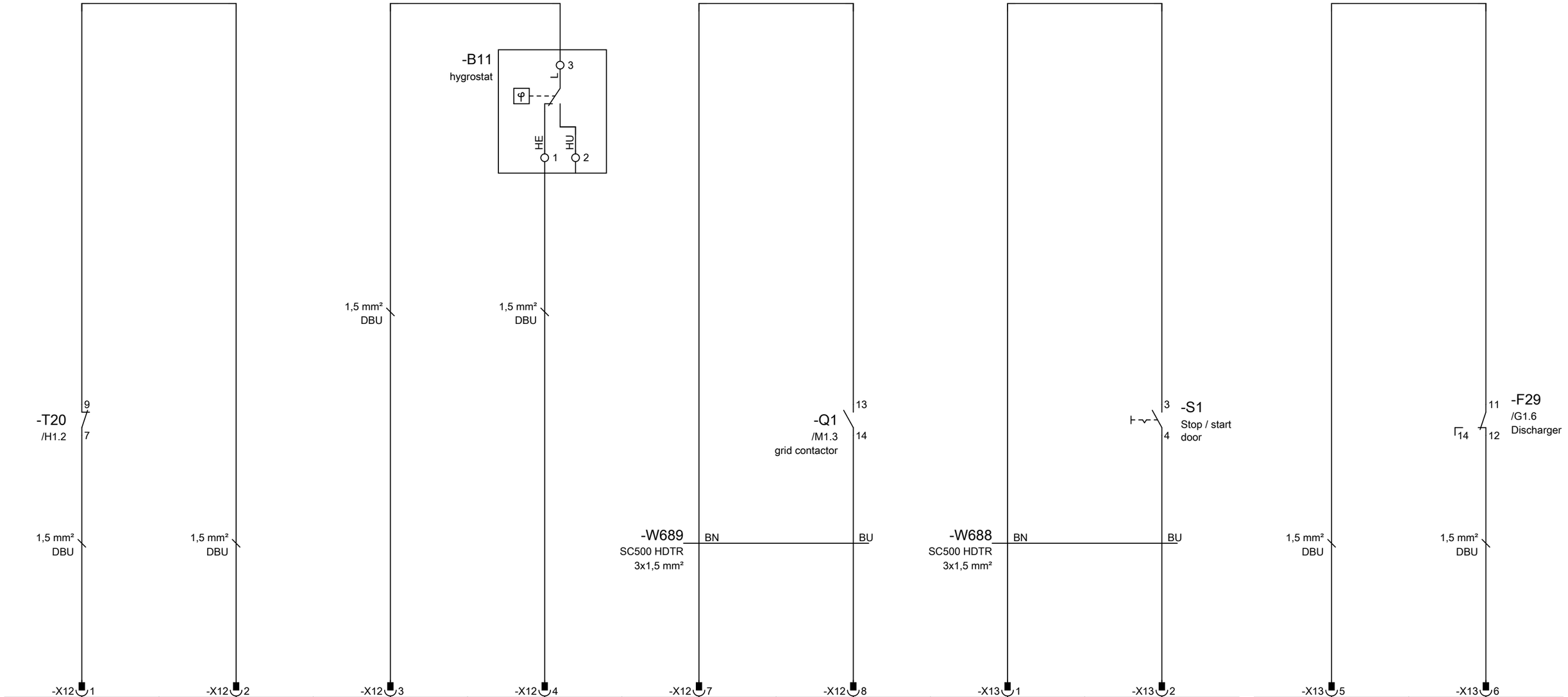

-X12 1	-X12 2	-X12 3	-X12 4	-X12 7	-X12 8	-X13 1	-X13 2	-X13 5	-X13 6
24V	DI	24V	DI	24V	DI	24V	DI	24V	DI
-A1	-A1	-A2	-A2	-A1	-A1	-A1	-A1	-A1	-A1
/O2	/O2	/O10	/O10	/O2	/O2	/O2	/O2	/O2	/O2
	=SC-T20:9		=SC-B11:1		=SC-Q1:14		=SC-S1:4		=SC-F29:12
24V digital IN without disconnection	Power Fail 230V	24V	Hygrostat	24V digital IN without disconnection	feedback Grid contactor	24V digital IN without disconnection	Key switch Start/Stop	24V digital IN without disconnection	Discharger

Standard

			Date	07.04.2011	Sunny Central 720-CP-10	SMA Solar Technology AG D-34266 Niestetal +49 (0)561 - 9522 - 0	Control digital inputs X12 , X13	SC-720-CP-10:A	SC-720-CP-10 &EFS M7
			Author	R.Branz					
			Checked	J.Bader					
Modification	Date	Name	Origin		Replacement of	Replaced by		SC-720-CP-10-CEN110910	

1	2	3	4	5	6	7	8	9	10

=SC

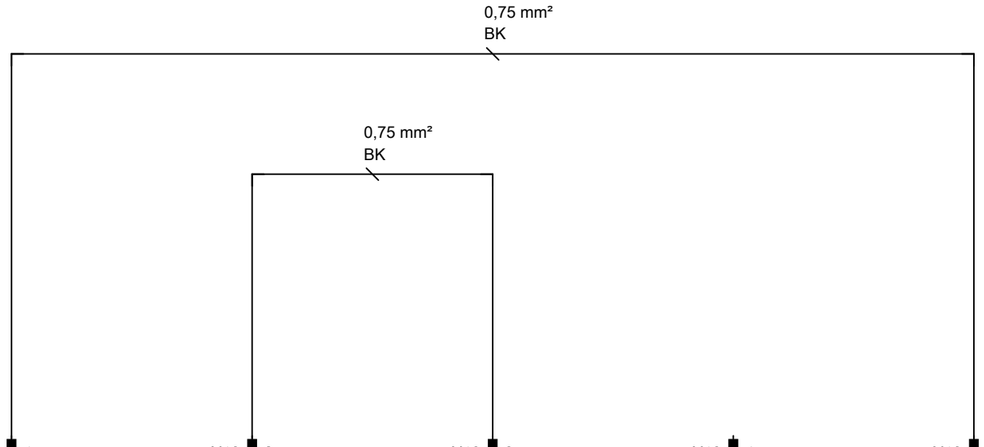

-X10 1	-X10 2	-X10 3	-X10 4	-X10 5
24V	24V	DI	DI	DI
-A1	-A1	-A1	-A1	-A1
/O1	/O1	/O1	/O1	/O1
		=SC-A1-X10:3		=SC-A1-X10:5
24V rapid deactivation	24V rapid deactivation	rapid deactivation overtemperature magnetic device 1	rapid deactivation Option N.C.	rapid deactivation Atmel

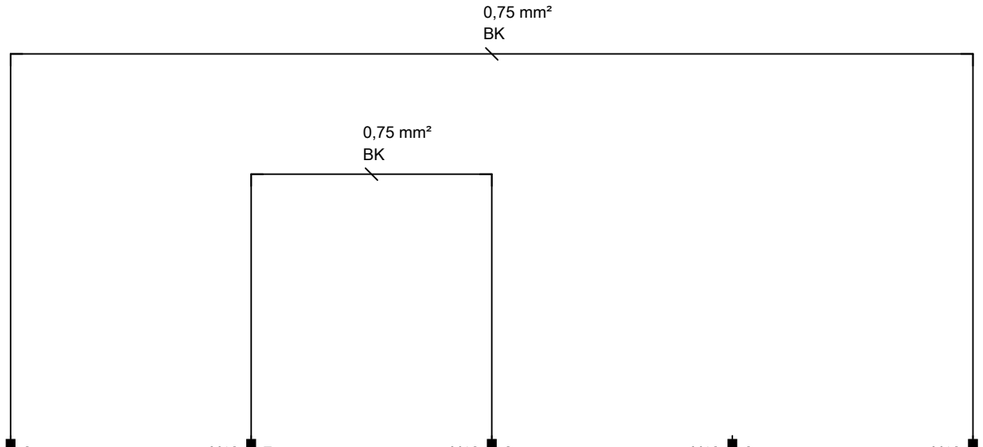

-X10 6	-X10 7	-X10 8	-X10 9	-X10 10
24V	24V	DI	DI	DI
-A1	-A1	-A1	-A1	-A1
/O1	/O1	/O1	/O1	/O1
		=SC-A1-X10:8		=SC-A1:6
24V rapid deactivation	24V rapid deactivation	door contact 1	rapid deactivation Option N.C.	rapid deactivation Atmel

Standard

			Date	07.04.2011	Sunny Central 720-CP-10	SMA Solar Technology AG D-34266 Niestetal +49 (0)561 - 9522 - 0	Control General SC-20CONT.GR-S1	SC-720-CP-10:A	SC-720-CP-10 &EFS
			Author	R.Branz					M8
			Checked	J.Bader					
Modification	Date	Name	Origin		Replacement of	Replaced by		SC-720-CP-10-CEN110910	

1	2	3	4	5	6	7	8	9	10

=SC

Temperature sensor

Conrol Cabinet

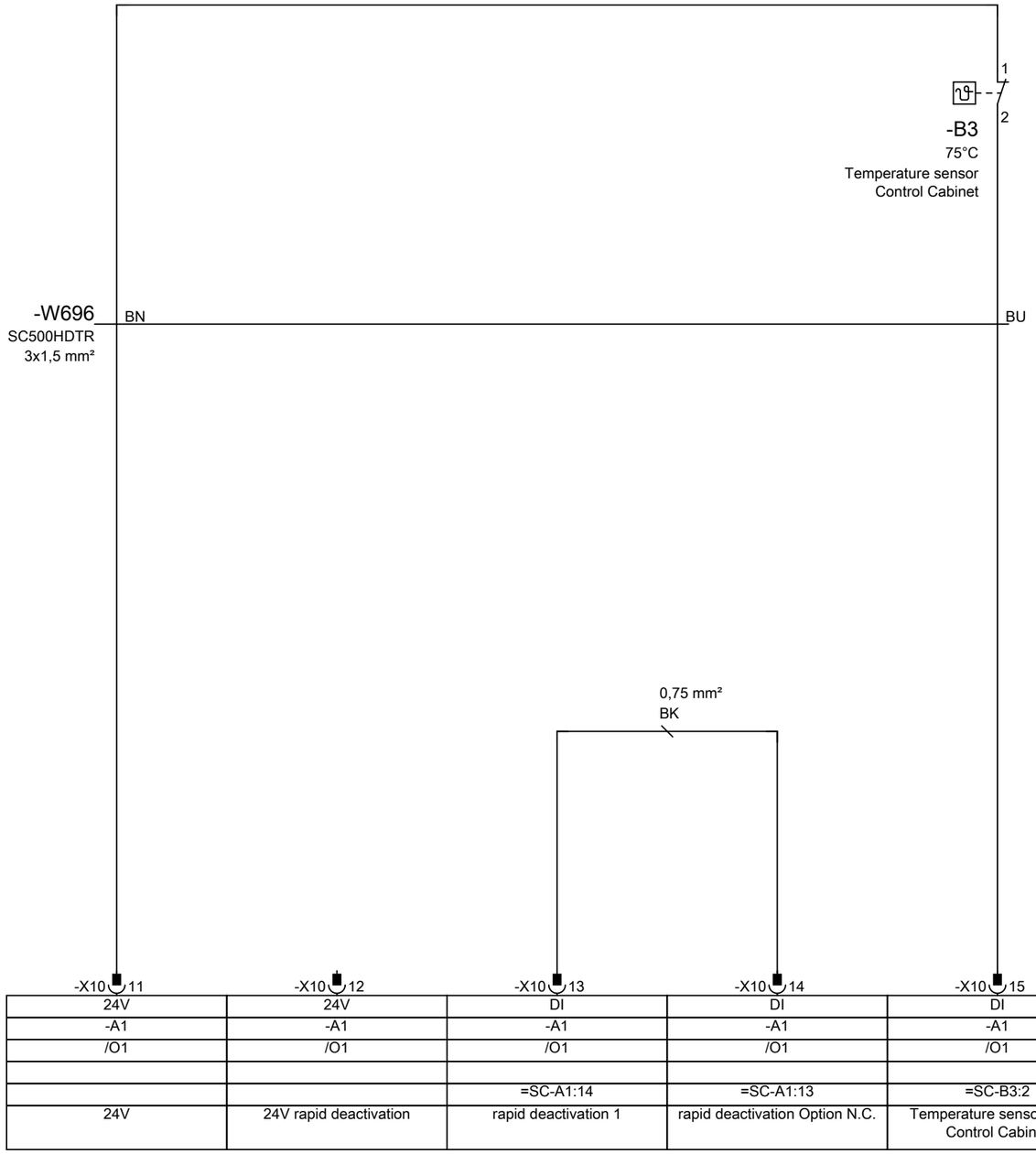

-X10 11	-X10 12	-X10 13	-X10 14	-X10 15	-X10 16
24V	24V	DI	DI	DI	DI
-A1	-A1	-A1	-A1	-A1	-A1
/O1	/O1	/O1	/O1	/O1	/O1
		=SC-A1:14	=SC-A1:13	=SC-B3:2	
24V	24V rapid deactivation	rapid deactivation 1	rapid deactivation Option N.C.	Temperature sensor 75°C Control Cabinet	N.C.

Standard

			Date	07.04.2011	Sunny Central 720-CP-10	SMA Solar Technology AG D-34266 Niestetal +49 (0)561 - 9522 - 0	Control General SC-20CONT.GR-S1	SC-720-CP-10:A	SC-720-CP-10 &EFS M9
			Author	R.Branz					
			Checked	J.Bader					SC-720-CP-10-CEN110910
Modification	Date	Name	Origin		Replacement of	Replaced by			

1	2	3	4	5	6	7	8	9	10

=SC

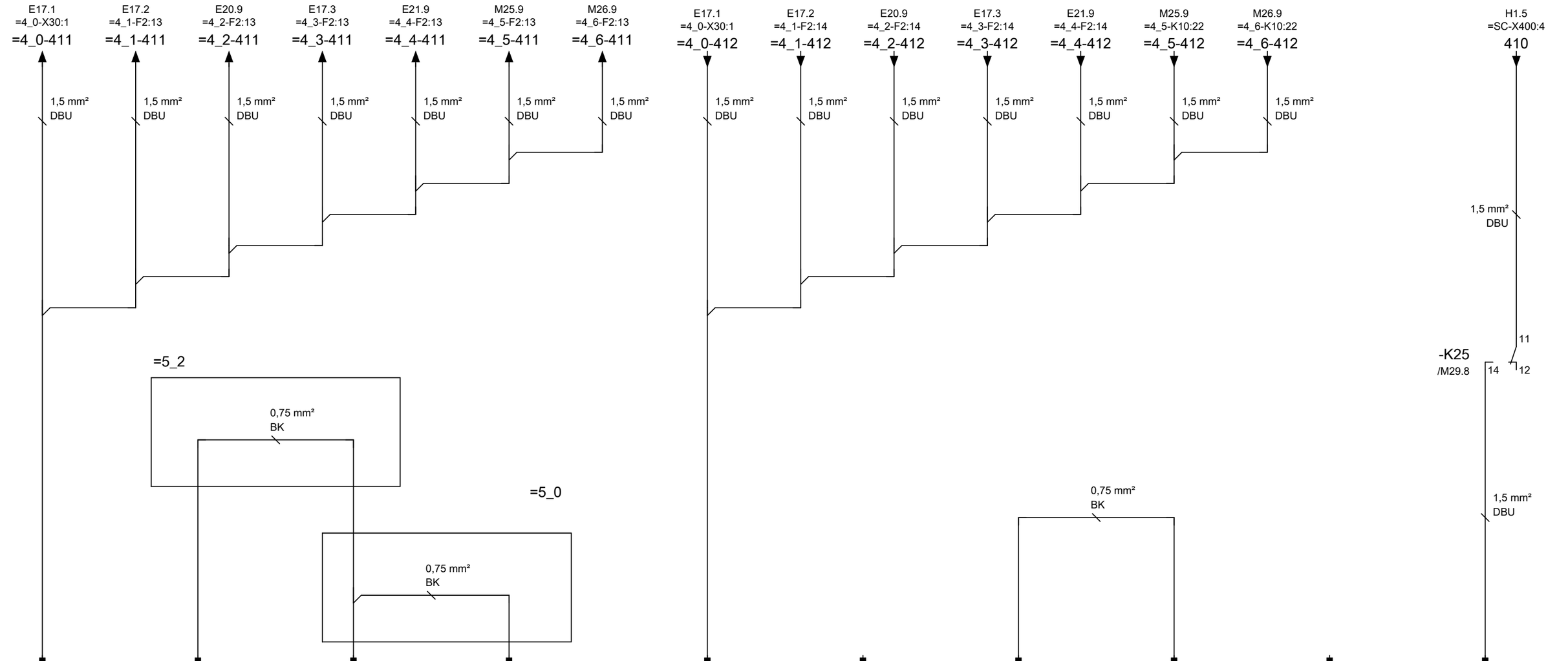

-X11 1	-X11 2	-X11 3	-X11 4
24V	24V	DI	DI
-A1	-A1	-A1	-A1
/O1	/O1	/O1	/O1
		=SC-A1:2	=SC-A1:3
24V	24V rapid deactivation	rapid deactivation Relay grid monitoring / GFDI	rapid deactivation Option N.C.

-X11 5	-X11 6	-X11 7	-X11 8	-X11 9	-X11 10
DI	24V	24V	DI	DI	DI
-A1	-A1	-A1	-A1	-A1	-A1
/O1	/O1	/O1	/O1	/O1	/O1
=SC-A1:1			=SC-A1:7		=SC-K25:14
feedback GFDI	24V rapid deactivation	24V rapid deactivation	Hermetical full protection Medium voltage transformer	rapid deactivation Option N.C.	rapid deactivation Atmel

Standard
Option 4_0
Option 4_1
Option 4_2
Option 4_3
Option4_4
Option 4_5
Option 4_6
Option 5_0
Option 5_1
Option 5_2

			Date	07.04.2011	Sunny Central 720-CP-10	SMA Solar Technology AG D-34266 Niestetal +49 (0)561 - 9522 - 0	Control General SC-20CONT.GR-S1	SC-720-CP-10:A	SC-720-CP-10 &EFS
			Author	R.Branz					M10
			Checked	J.Bader					
Modification	Date	Name	Origin		Replacement of	Replaced by		SC-720-CP-10-CEN110910	

1	2	3	4	5	6	7	8	9	10

=SC

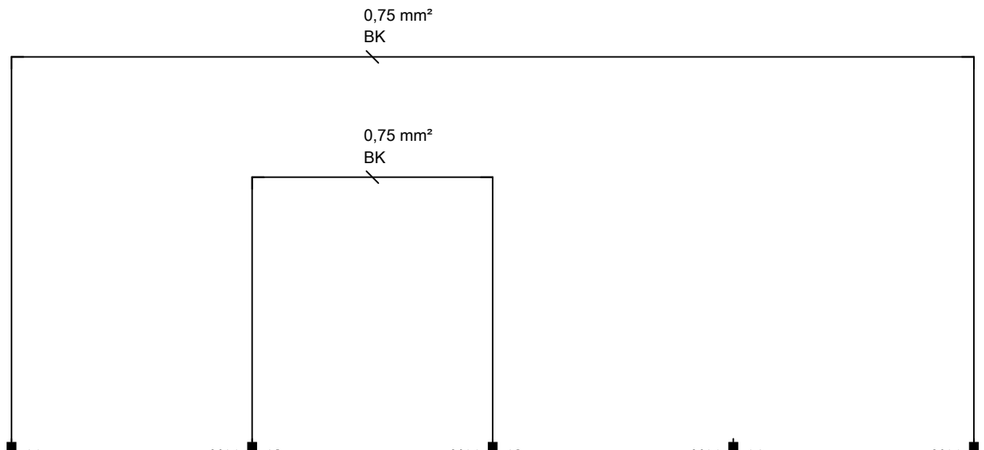

24V	24V	DI	DI	DI	DI
-A1	-A1	-A1	-A1	-A1	-A1
/O1	/O1	/O1	/O1	/O1	/O1
		=SC-A1-X11:13		=SC-A1-X11:15	
24V rapid deactivation	24V rapid deactivation	Hardware failure EVR	rapid deactivation Option N.C.	rapid deactivation Atmel	N.C.

Standard

			Date	07.04.2011	Sunny Central 720-CP-10	SMA	SMA Solar Technology AG D-34266 Niestetal +49 (0)561 - 9522 - 0	Control General SC-20CONT.GR-S1	SC-720-CP-10:A	SC-720-CP-10 &EFS
			Author	R.Branz						M11
			Checked	J.Bader						
Modification	Date	Name	Origin		Replacement of	Replaced by			SC-720-CP-10-CEN110910	

1	2	3	4	5	6	7	8	9	10

=SC

-X701 = control GFDI

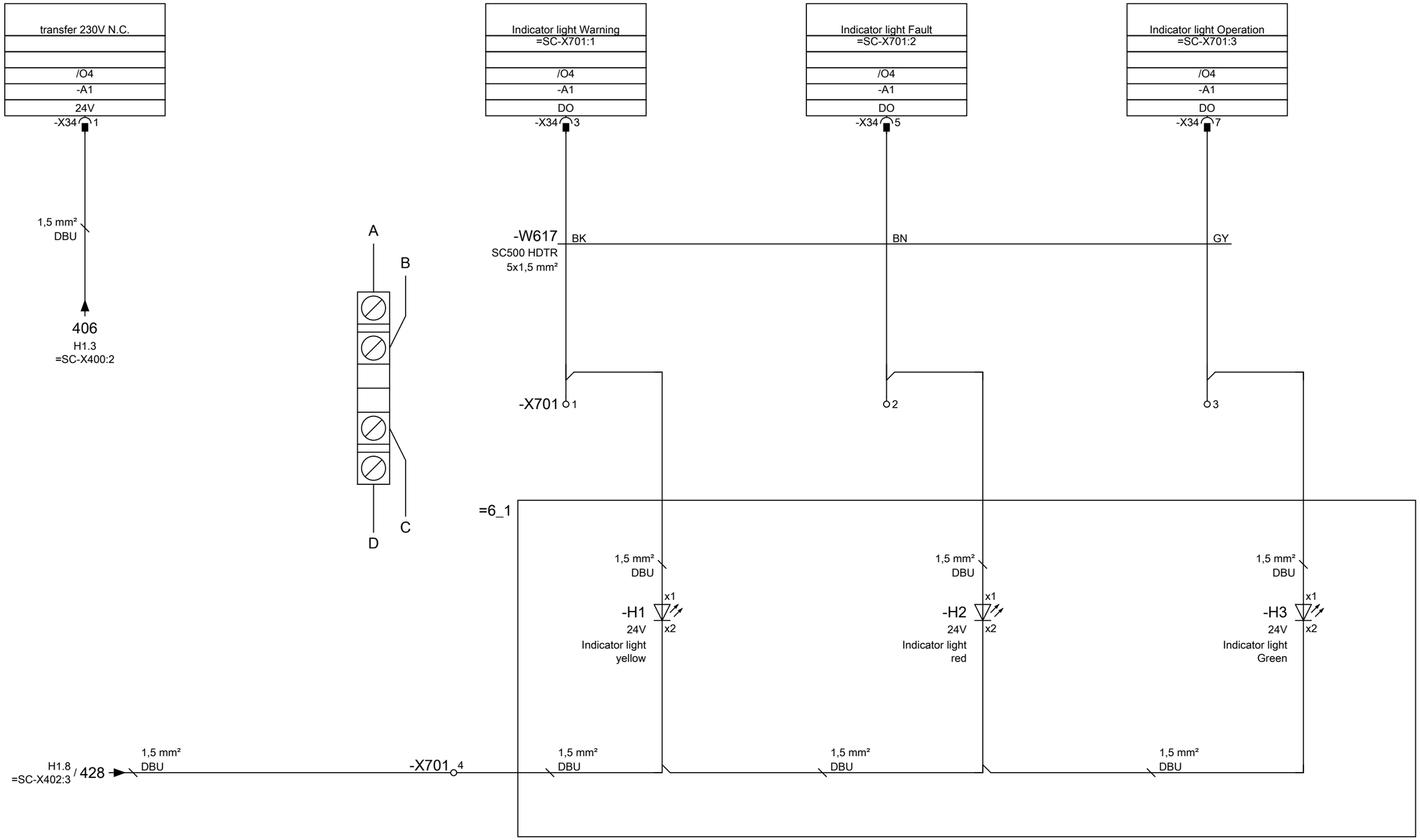

Standard
Option 6_1

			Date	07.04.2011	Sunny Central 720-CP-10	SMA Solar Technology AG D-34266 Niestetal +49 (0)561 - 9522 - 0	Control Indicator light	SC-720-CP-10:A	SC-720-CP-10 &EFS
			Author	R.Branz					M13
			Checked	J.Bader					
Modification	Date	Name	Origin		Replacement of	Replaced by		SC-720-CP-10-CEN110910	

1	2	3	4	5	6	7	8	9	10

=SC

-X430 = Temperature Sensor Sine filter

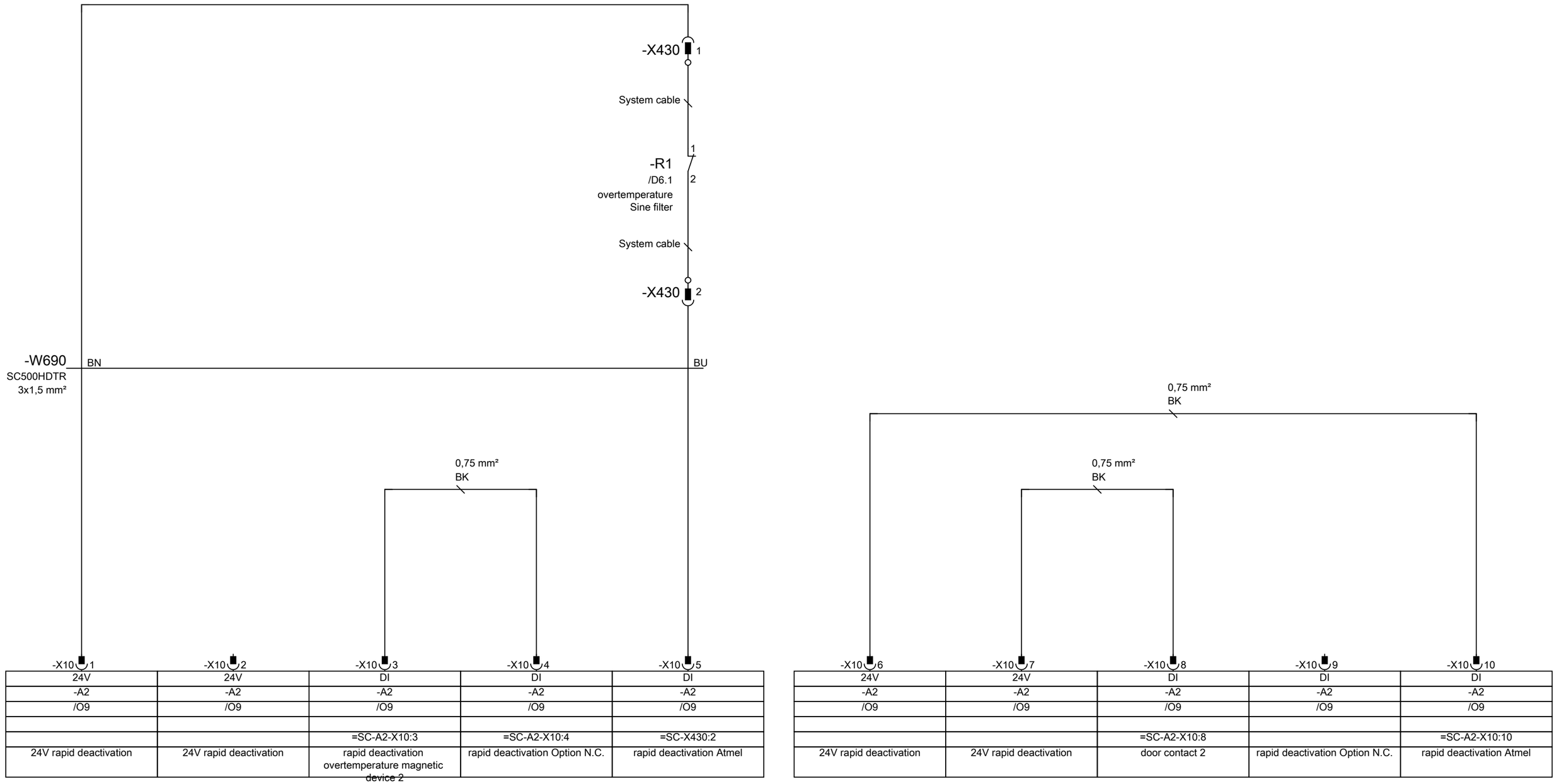

-X10 1	-X10 2	-X10 3	-X10 4	-X10 5
24V	24V	DI	DI	DI
-A2	-A2	-A2	-A2	-A2
/O9	/O9	/O9	/O9	/O9
		=SC-A2-X10:3	=SC-A2-X10:4	=SC-X430:2
24V rapid deactivation	24V rapid deactivation	rapid deactivation overtemperature magnetic device 2	rapid deactivation Option N.C.	rapid deactivation Atmel

-X10 6	-X10 7	-X10 8	-X10 9	-X10 10
24V	24V	DI	DI	DI
-A2	-A2	-A2	-A2	-A2
/O9	/O9	/O9	/O9	/O9
		=SC-A2-X10:8		=SC-A2-X10:10
24V rapid deactivation	24V rapid deactivation	door contact 2	rapid deactivation Option N.C.	rapid deactivation Atmel

Standard

			Date	07.04.2011	Sunny Central 720-CP-10	SMA Solar Technology AG D-34266 Niestetal +49 (0)561 - 9522 - 0	Control General SC20CAIO.GR1	SC-720-CP-10:A	SC-720-CP-10 &EFS
			Author	R.Branz					M14
			Checked	J.Bader					
Modification	Date	Name	Origin		Replacement of	Replaced by		SC-720-CP-10-CEN110910	

1	2	3	4	5	6	7	8	9	10

=SC

Temperature sensor
Power Cabinet

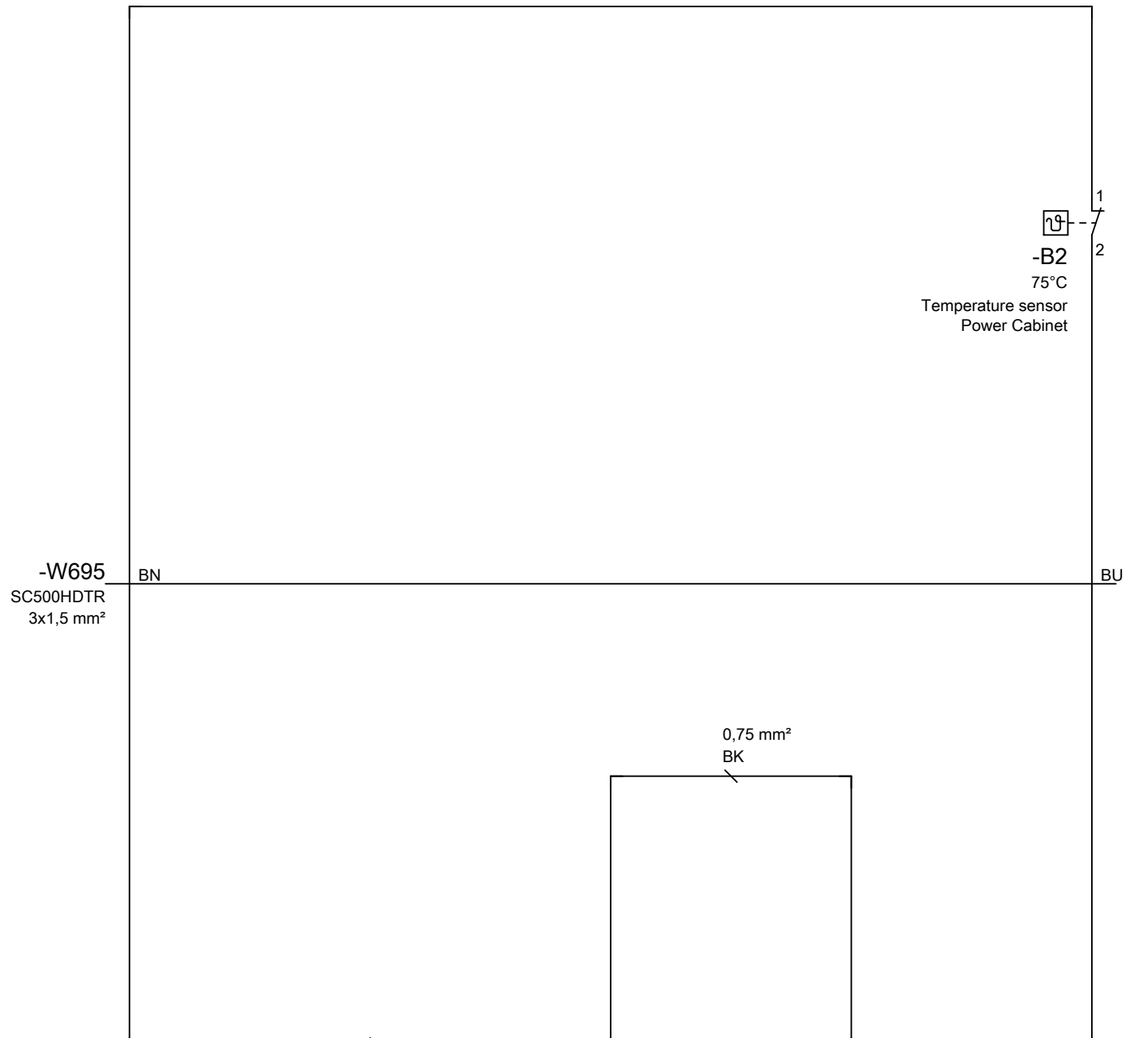

-X10:11	-X10:12	-X10:13	-X10:14	-X10:15	-X10:16
24V	24V	DI	DI	DI	DI
-A2	-A2	-A2	-A2	-A2	-A2
/O9	/O9	/O9	/O9	/O9	/O9
		=SC-A2:14	=SC-A2:13	=SC-B2:2	
24V	24V rapid deactivation	rapid deactivation 2	rapid deactivation Option N.C.	Temperature.sensor 75°C Power Cabinet	N.C.

Standard

			Date	11.04.2011	Sunny Central 720-CP-10	SMA Solar Technology AG D-34266 Niestetal +49 (0)561 - 9522 - 0	Control General SC20CAIO.GR1	SC-720-CP-10:A	SC-720-CP-10 &EFS
			Author	R.Branz					M15
			Checked	J.Bader					
Modification	Date	Name	Origin		Replacement of	Replaced by		SC-720-CP-10-CEN110910	

1	2	3	4	5	6	7	8	9	10

=SC

-X726 = Triggering Relay=14_4-K26

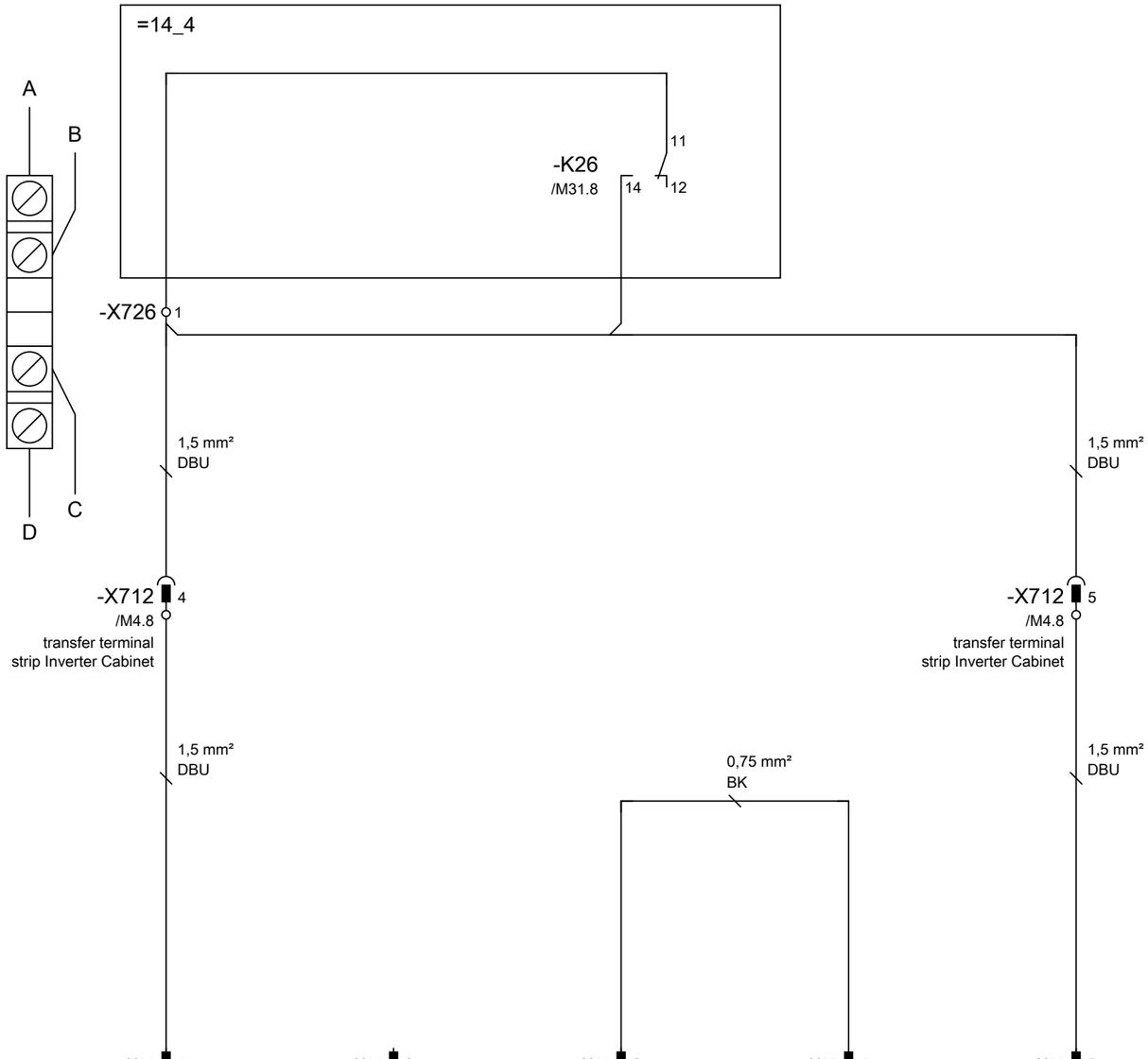

-X11 1	-X11 2	-X11 3	-X11 4	-X11 5	-X11 6	-X11 7	-X11 8	-X11 9	-X11 10
24V	24V	DI	DI	DI	24V	24V	DI	DI	DI
-A2	-A2	-A2	-A2	-A2	-A2	-A2	-A2	-A2	-A2
/O10	/O10	/O10	/O10	/O10	/O10	/O10	/O10	/O10	/O10
		=SC-A2:4	=SC-A2:3	=SC-A2-X10:5			=SC-A2-X11:8		=SC-A2:6
24V Spare Input	24V Spare Input	Spare Input	rapid deactivation Option N.C.	rapid deactivation Atmel	24V Spare Input	24V Spare Input	Spare Input	rapid deactivation Option N.C.	rapid deactivation Atmel

Notice:
Terminal strip =SC-X726 is not used at Option 14_4

Standard
Option 14_4

			Date	07.04.2011	Sunny Central 720-CP-10	SMA Solar Technology AG D-34266 Niestetal +49 (0)561 - 9522 - 0	Control General SC20CAIO.GR1	SC-720-CP-10:A	SC-720-CP-10 &EFS
			Author	R.Branz					M16
			Checked	J.Bader					
Modification	Date	Name	Origin		Replacement of	Replaced by			SC-720-CP-10-CEN110910

1	2	3	4	5	6	7	8	9	10

=SC

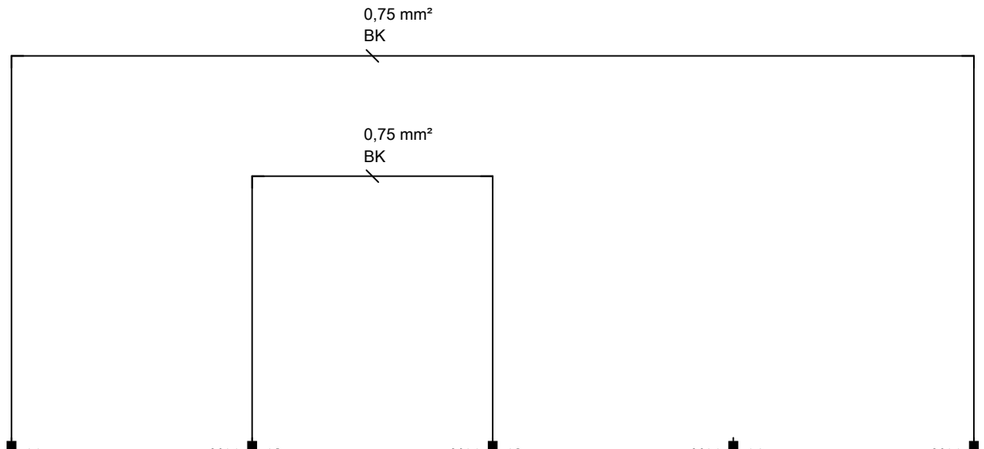

-X11 11	-X11 12	-X11 13	-X11 14	-X11 15	-X11 16
24V	24V	DI	DI	DI	DI
-A2	-A2	-A2	-A2	-A2	-A2
/O10	/O10	/O10	/O10	/O10	/O10
		=SC-A2:12		=SC-A2:11	
24V Spare Input	24V Spare Input	Spare Input	rapid deactivation Option N.C.	rapid deactivation Atmel	N.C.

Standard

			Date	07.04.2011	Sunny Central 720-CP-10	SMA Solar Technology AG D-34266 Niestetal +49 (0)561 - 9522 - 0	Control General SC20CAIO.GR1	SC-720-CP-10:A	SC-720-CP-10 &EFS
			Author	R.Branz					M17
			Checked	J.Bader					
Modification	Date	Name	Origin		Replacement of	Replaced by		SC-720-CP-10-CEN110910	

1	2	3	4	5	6	7	8	9	10
=SC	voltage measurement transformer voltage	voltage measurement transformer voltage	voltage measurement transformer voltage	Spare	Grid contactor closed	Grid contactor closed			
	-X214 = disconnect terminal								

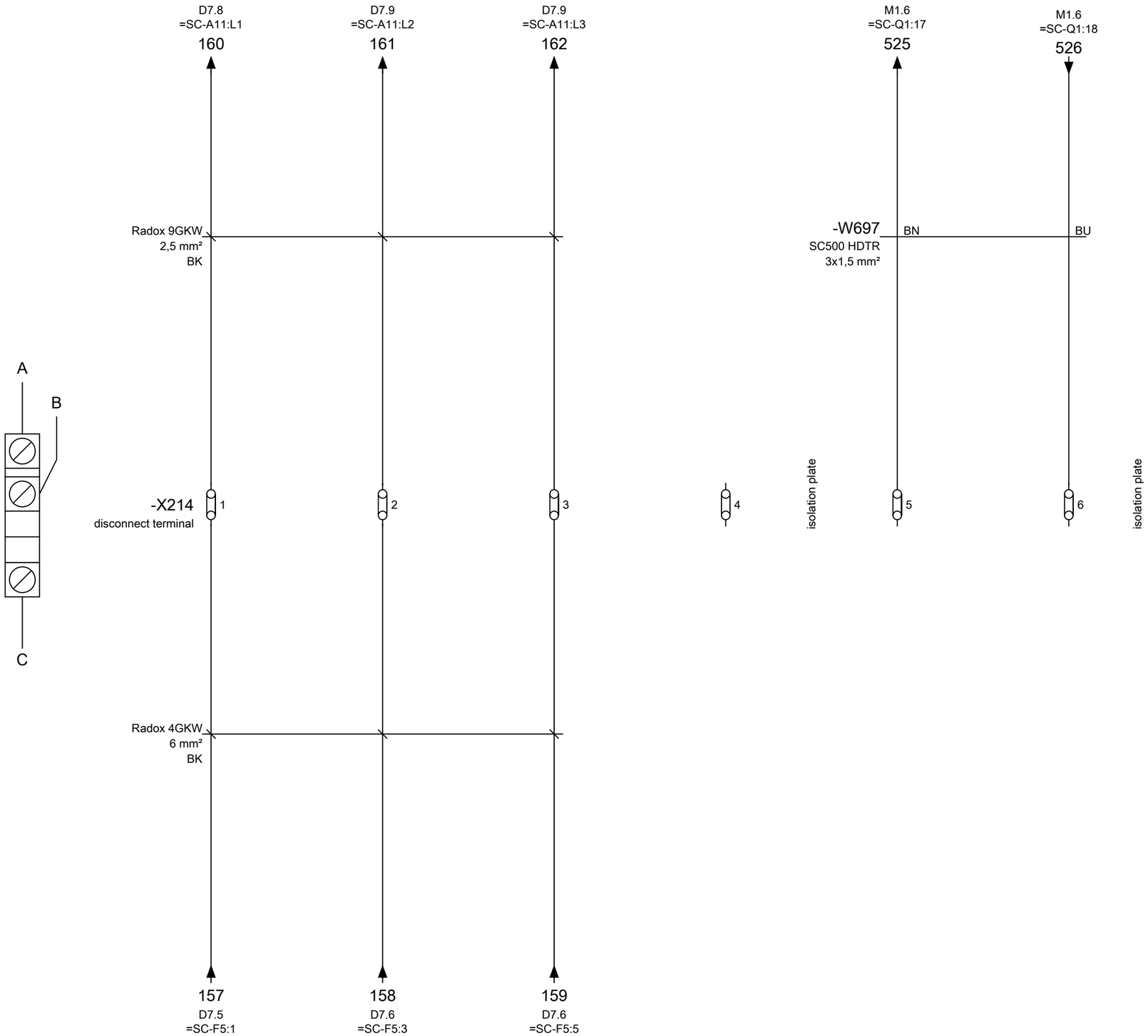

Standard

			Date	07.04.2011	Sunny Central 720-CP-10	SMA Solar Technology AG D-34266 Niestetal +49 (0)561 - 9522 - 0	grid voltage monitoring testing terminal strip	SC-720-CP-10:A	SC-720-CP-10 &EFS	
			Author	R.Branz					M18	
			Checked	J.Bader						
Modification	Date	Name	Origin		Replacement of	Replaced by			SC-720-CP-10-CEN110910	

1	2	3	4	5	6	7	8	9	10

=SC	-A1-X70 = CAN BUS System	-A2-X70 = CAN BUS System	-X80 = SC20APP-72DE	-X81 = SC20CAN-AD2
	-A1-X71 = Termination	-A2-X71 = Termination	-A1-X90 = Application coding	
	-X72 = application coding A1-X71	-X73 = application coding A2-X71	-A2-X92 = application coding	

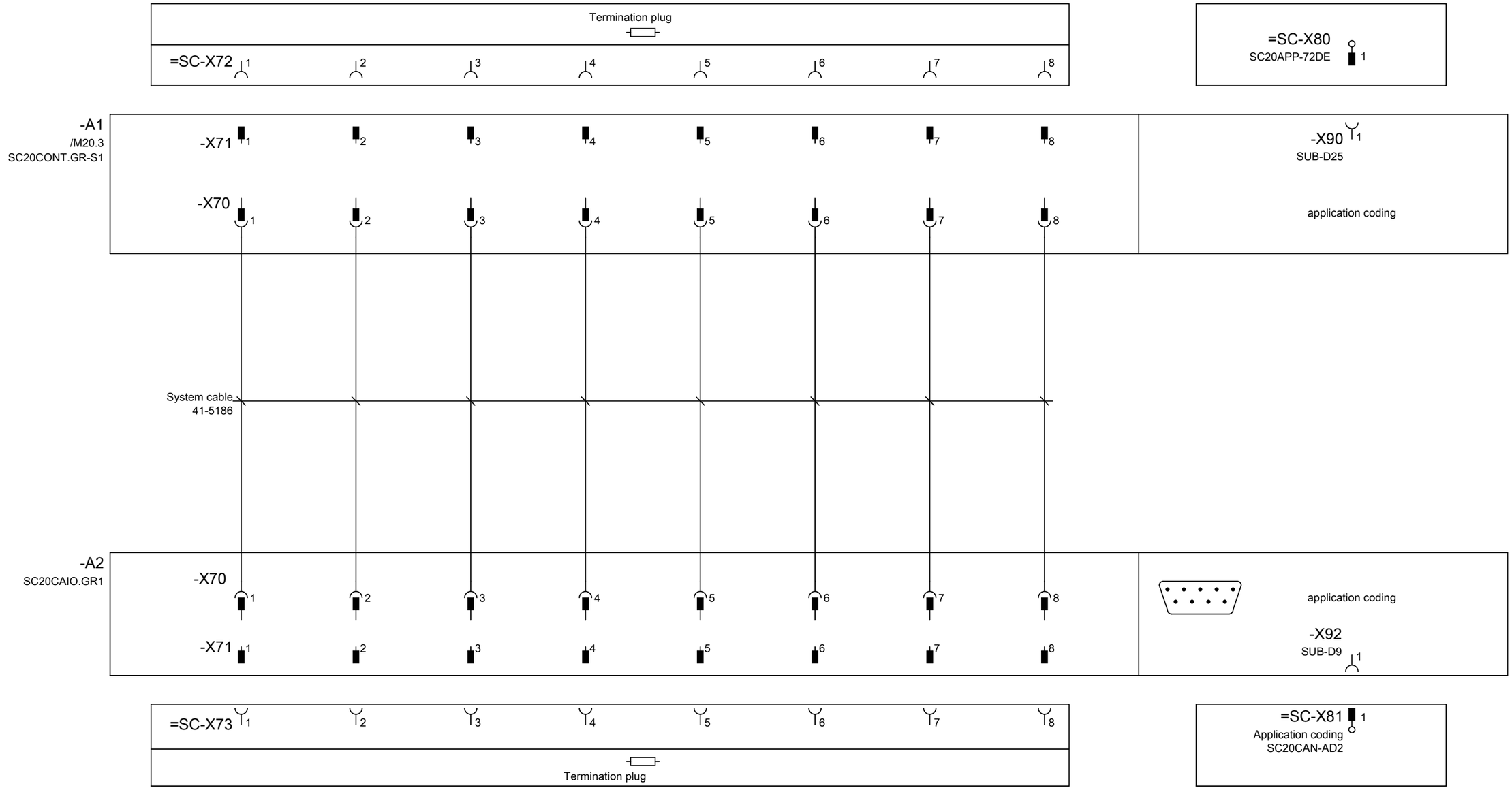

Standard

			Date	07.04.2011	Sunny Central 720-CP-10	SMA Solar Technology AG D-34266 Niestetal +49 (0)561 - 9522 - 0	Control Master/Slave	SC-720-CP-10:A	SC-720-CP-10 &EFS
			Author	R.Branz					M19
			Checked	J.Bader					
Modification	Date	Name	Origin		Replacement of	Replaced by			SC-720-CP-10-CEN110910

1	2	3	4	5	6	7	8	9	10
=SC			Phase L1	Phase L2		Phase L3			

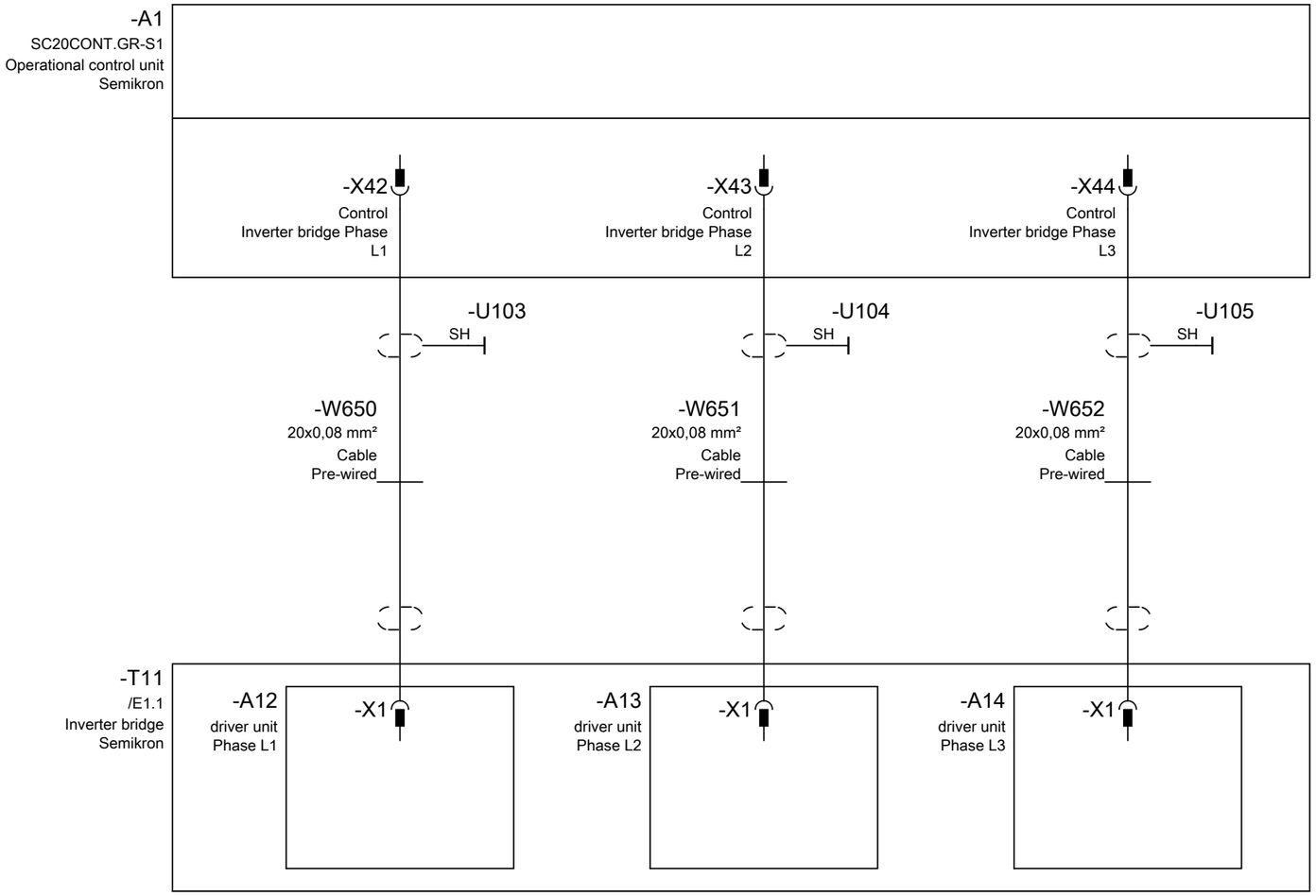

Standard

			Date	07.04.2011	Sunny Central 720-CP-10	SMA Solar Technology AG D-34266 Niestetal +49 (0)561 - 9522 - 0	Control Inverter bridge	SC-720-CP-10:A	SC-720-CP-10 &EFS M20
			Author	R.Branz					
			Checked	J.Bader					
Modification	Date	Name	Origin		Replacement of / Replaced by			SC-720-CP-10-CEN110910	

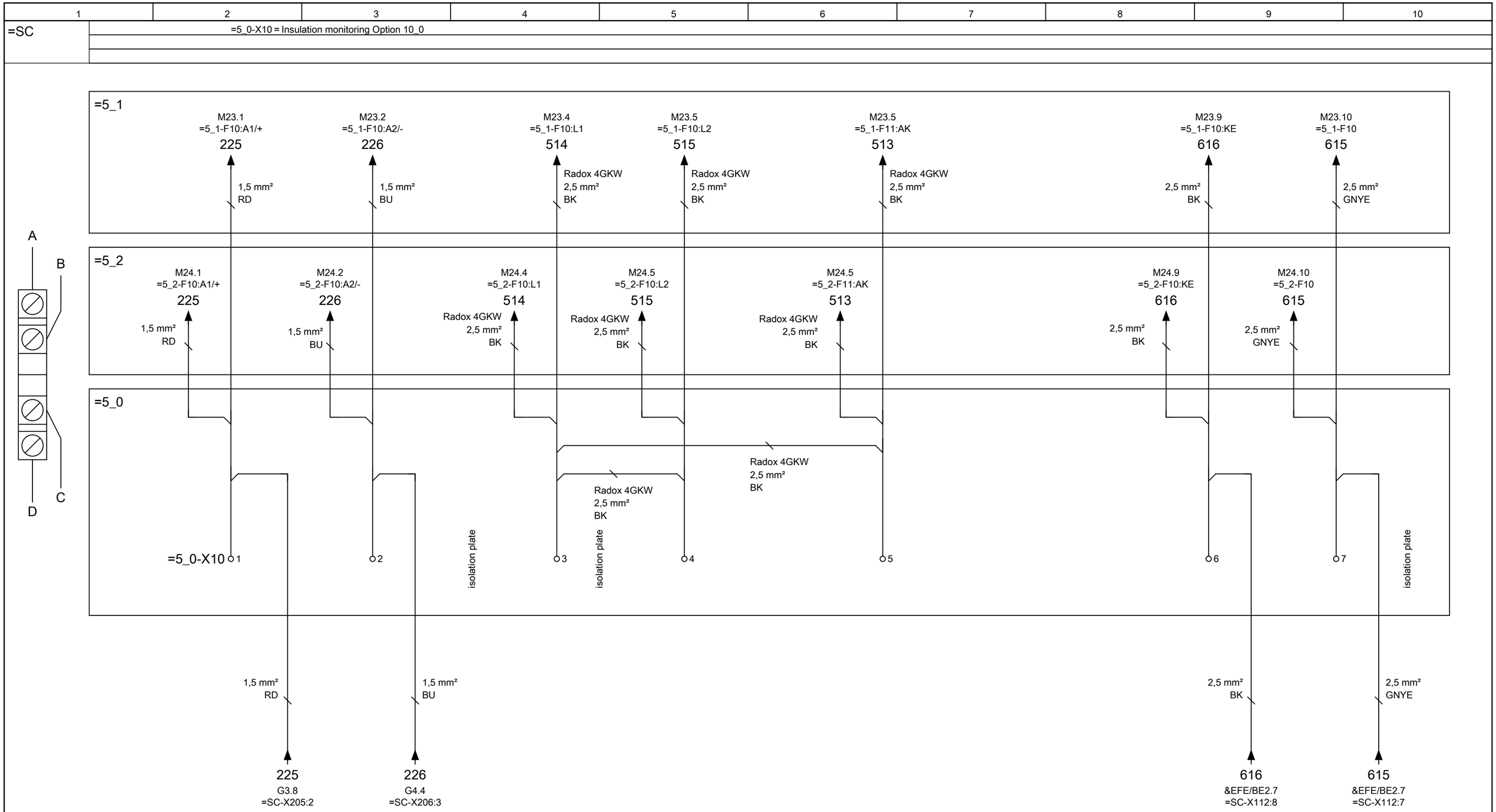

Standard
Option 5_0
Option 5_1
Option 5_2

Notice:
Terminal strip =5_0-X10 is not used at option 5_1 and 5_2

			Date	07.04.2011	Sunny Central 720-CP-10	SMA	SMA Solar Technology AG D-34266 Niestetal +49 (0)561 - 9522 - 0	Control Insulation monitoring	SC-720-CP-10:A	SC-720-CP-10	&EFS
			Author	R.Branz							M21
			Checked	J.Bader							
Modification	Date	Name	Origin		Replacement of	Replaced by				SC-720-CP-10-CEN110910	

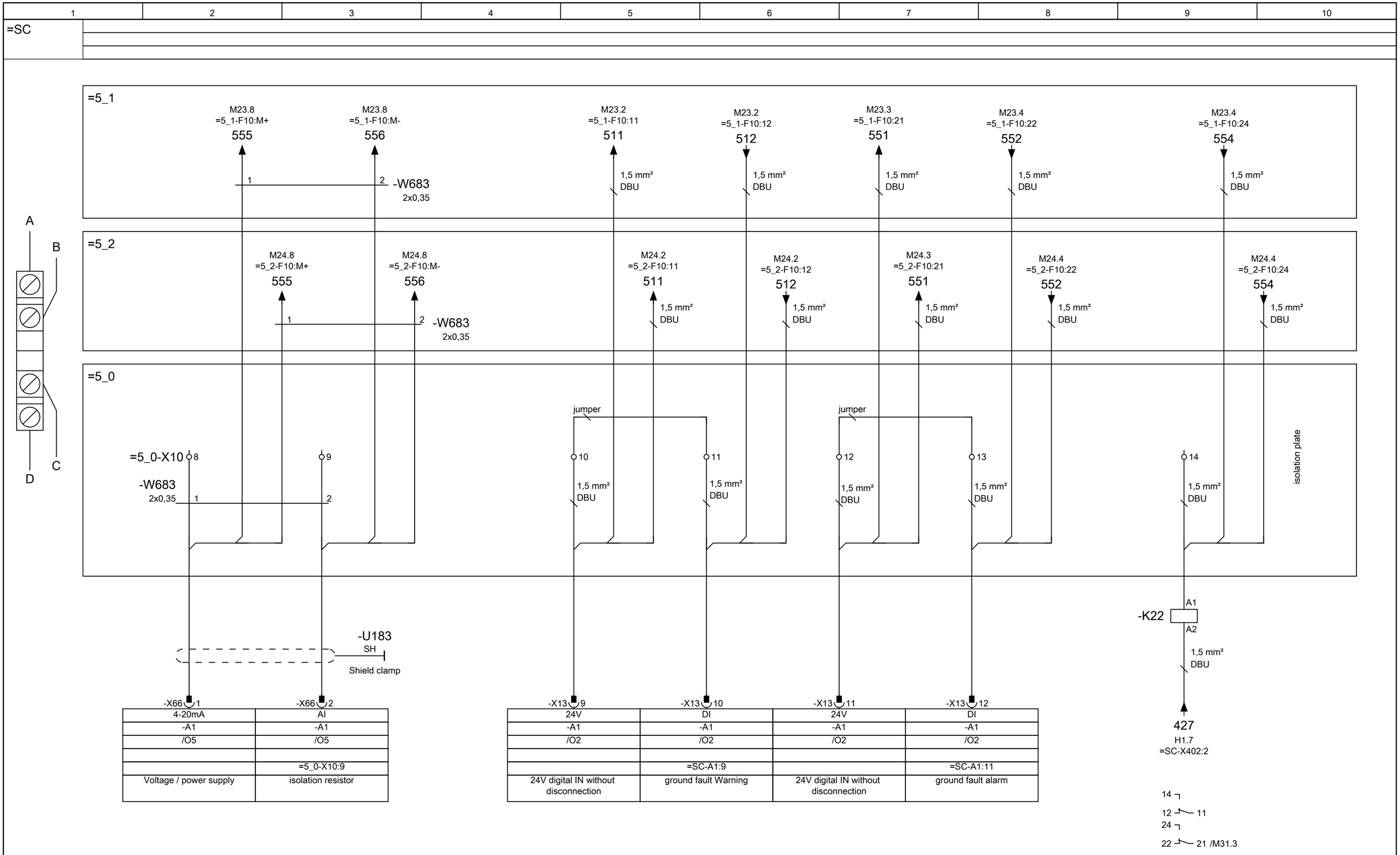

-X66 1	-X66 2
4-20mA	AI
-A1	-A1
/O5	/O5
	=5_0-X10:9
Voltage / power supply	isolation resistor

-X13 9	-X13 10	-X13 11	-X13 12
24V	DI	24V	DI
-A1	-A1	-A1	-A1
/O2	/O2	/O2	/O2
	=SC-A1:9		=SC-A1:11
24V digital IN without disconnection	ground fault Warning	24V digital IN without disconnection	ground fault alarm

Standard
Option 5_0
Option 5_1
Option 5_2

Notice:
Terminal strip =5_0-X10 is not used at option 5_1 and 5_2

			Date	07.04.2011	Sunny Central 720-CP-10	SMA
			Author	R.Branz		
			Checked	J.Bader		
Modification	Date	Name	Origin		Replacement of	Replaced by

SMA Solar Technology AG
D-34266 Niestetal
+49 (0)561 - 9522 - 0

Control Insulation monitoring
Failure messages

SC-720-CP-10:A

SC-720-CP-10 &EFS
M22

SC-720-CP-10-CEN110910

=5_1 Insulation monitoring

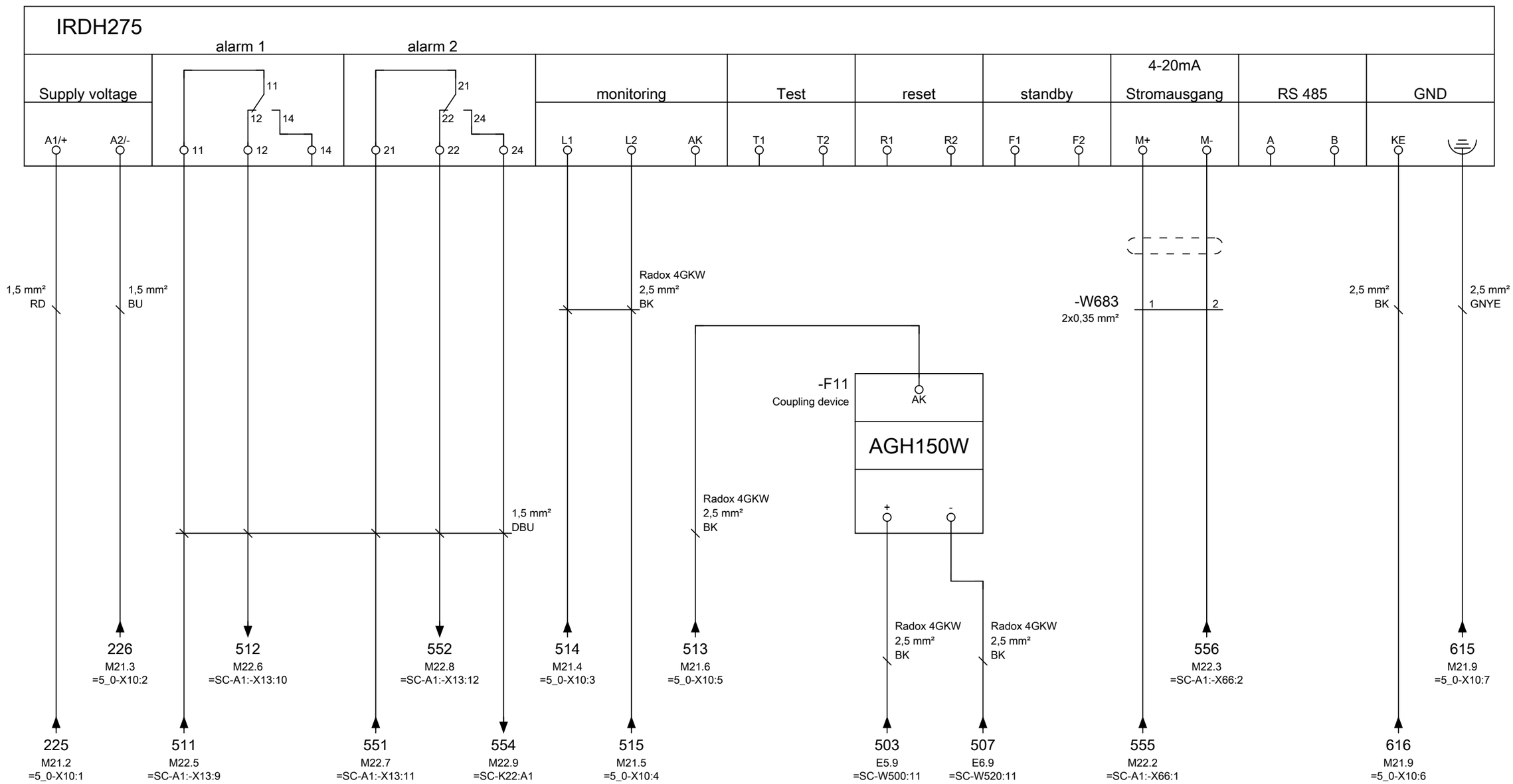

Option 5_1

			Date	07.04.2011	Sunny Central 720-CP-10	SMA Solar Technology AG D-34266 Niestetal +49 (0)561 - 9522 - 0	Control Insulation monitoring	SC-720-CP-10:A	SC-720-CP-10	&EFS
			Author	R.Branz						M23
			Checked	J.Bader						
Modification	Date	Name	Origin		Replacement of	Replaced by			SC-720-CP-10-CEN110910	

=5_2 Insulation monitoring

-F10
Insulation monitoring

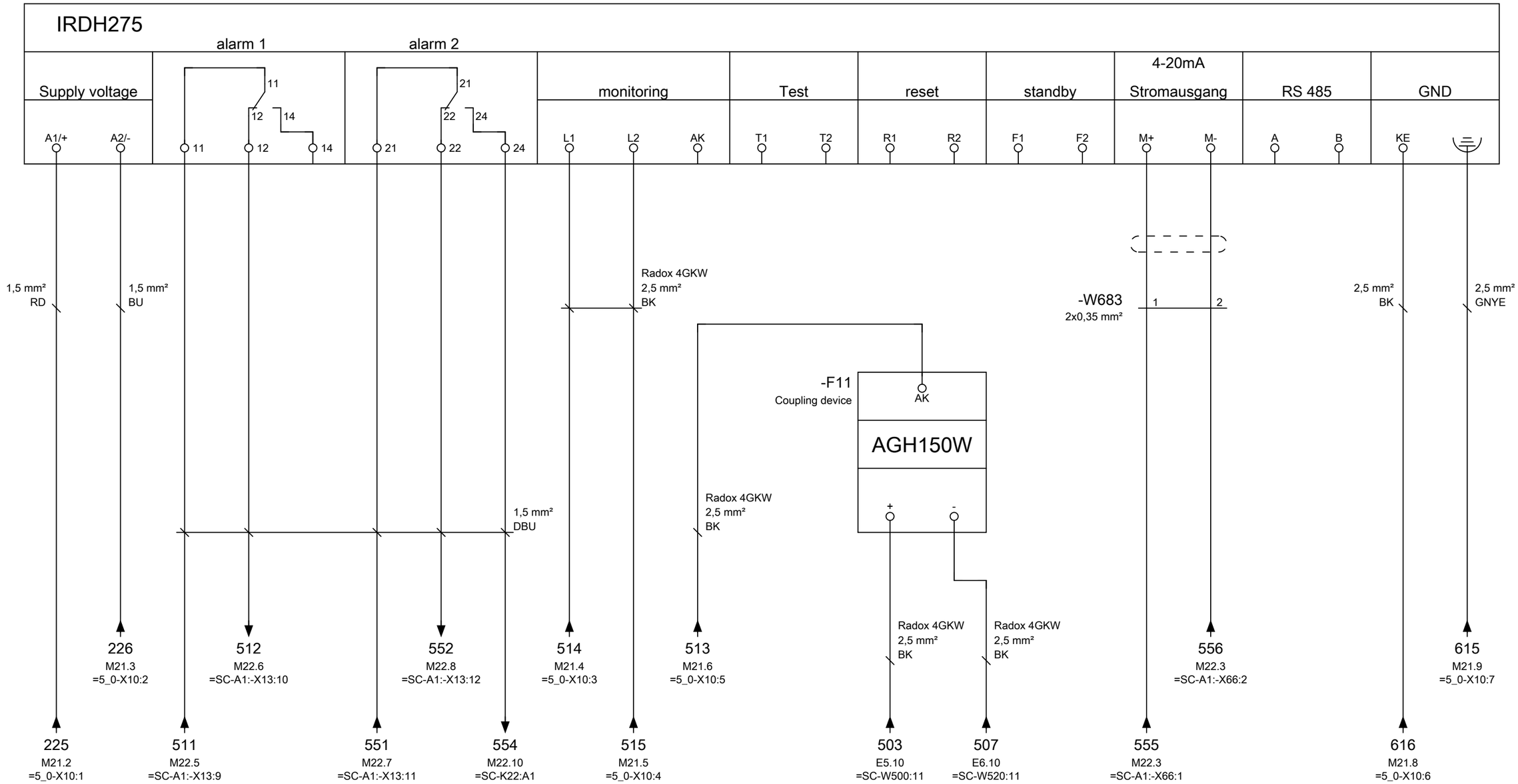

Option 5_2

			Date	07.04.2011	Sunny Central 720-CP-10	SMA Solar Technology AG D-34266 Niestetal +49 (0)561 - 9522 - 0	Control Insulation monitoring	SC-720-CP-10:A	SC-720-CP-10	&EFS
			Author	R.Branz						M24
			Checked	J.Bader						
Modification	Date	Name	Origin		Replacement of	Replaced by			SC-720-CP-10-CEN110910	

1	2	3	4	5	6	7	8	9	10
=4_5	RESET Softgrounding			Option 4_5		RESET		Feedback	
	=SC-X460 = Reset Softgrounding			Softgrounding		Soft			
	=SC-X451 = Softgrounding voltage relay			Plus grounded		grounding		-X450 = Softgrounding	

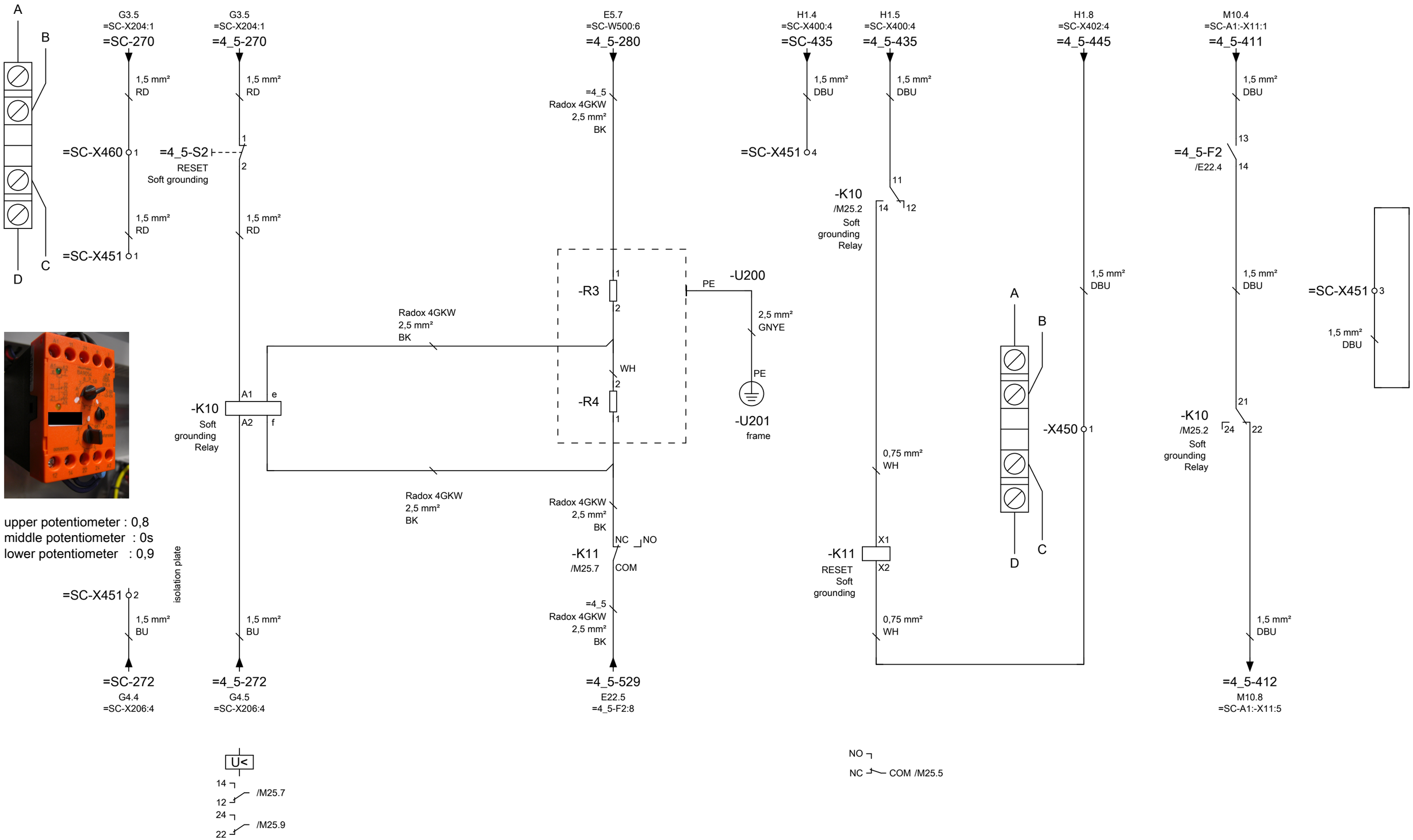

upper potentiometer : 0,8
middle potentiometer : 0s
lower potentiometer : 0,9

Standard
Option 4_5

			Date	07.04.2011	Sunny Central 720-CP-10	SMA Solar Technology AG D-34266 Niestetal +49 (0)561 - 9522 - 0	Control Softgrounding 4_5	SC-720-CP-10:A	SC-720-CP-10 &EFS M25
			Author	R.Branz					
			Checked	J.Bader					
Modification	Date	Name	Origin		Replacement of	Replaced by			SC-720-CP-10-CEN110910

1	2	3	4	5	6	7	8	9	10
=4_6	RESET Softgrounding			Option 4_6		RESET		Feedback	
				Softgrounding		Soft			
				Minus grounded		grounding		-X450 = Softgrounding	

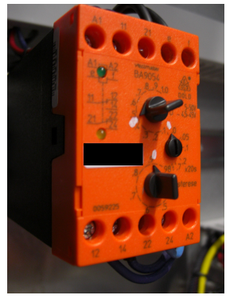

upper potentiometer : 0,8
middle potentiometer : 0s
lower potentiometer : 0,9

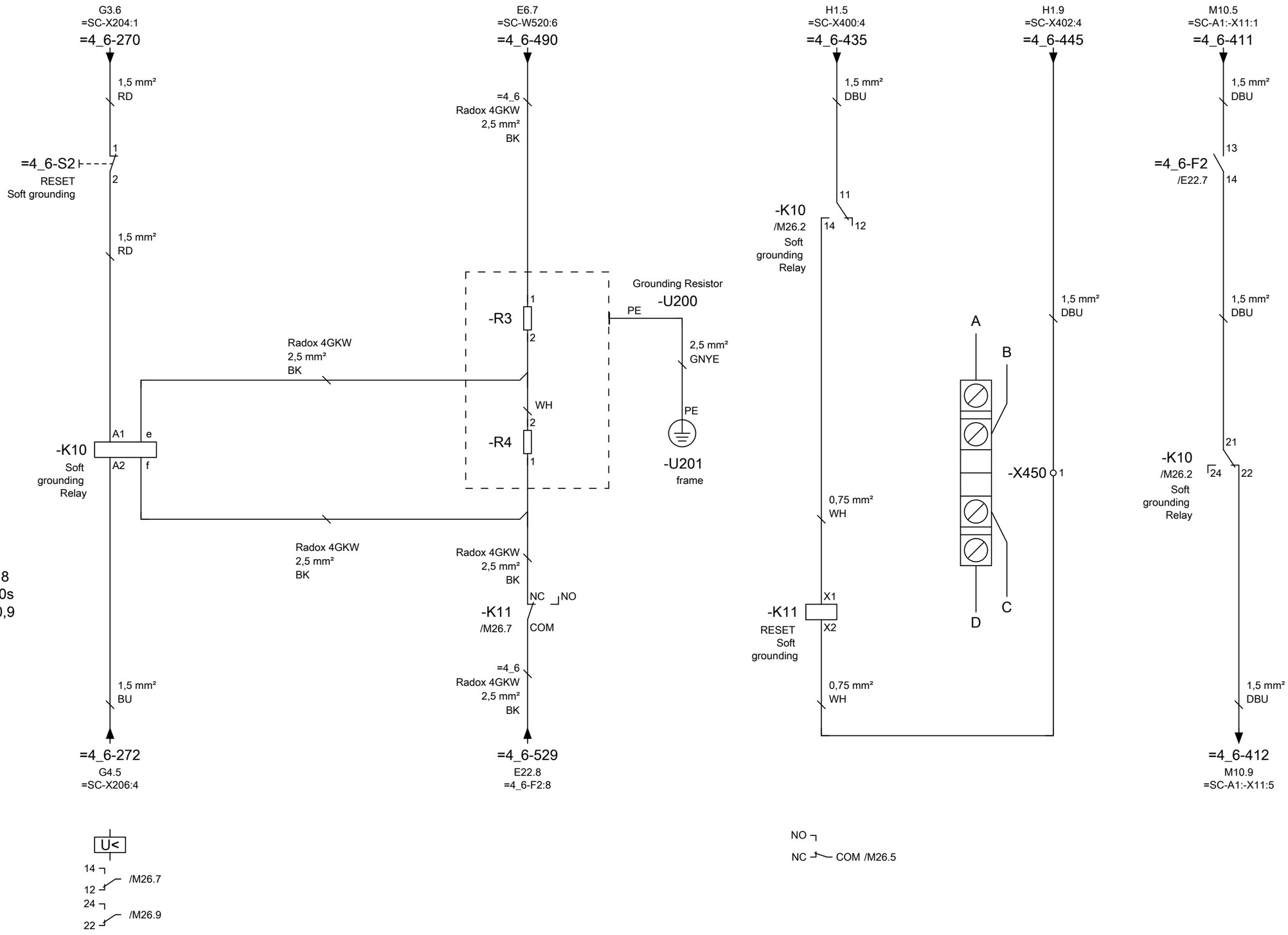

Standard
Option 4_6

			Date	07.04.2011	Sunny Central 720-CP-10	SMA Solar Technology AG	Control	SC-720-CP-10:A	SC-720-CP-10 &EFS
			Author	R.Branz		D-34266 Niestetal	Softgrounding 4_6		M26
			Checked	J.Bader		+49 (0)561 - 9522 - 0			SC-720-CP-10-CEN110910
Modification	Date	Name	Origin		Replacement of	Replaced by			

1	2	3	4	5	6	7	8	9	10

=SC

-X722 = Temperature sensor ambient temperature

-X721 = Temperature sensor Power Cabinet

-X720 = Temperature sensor Control Cabinet

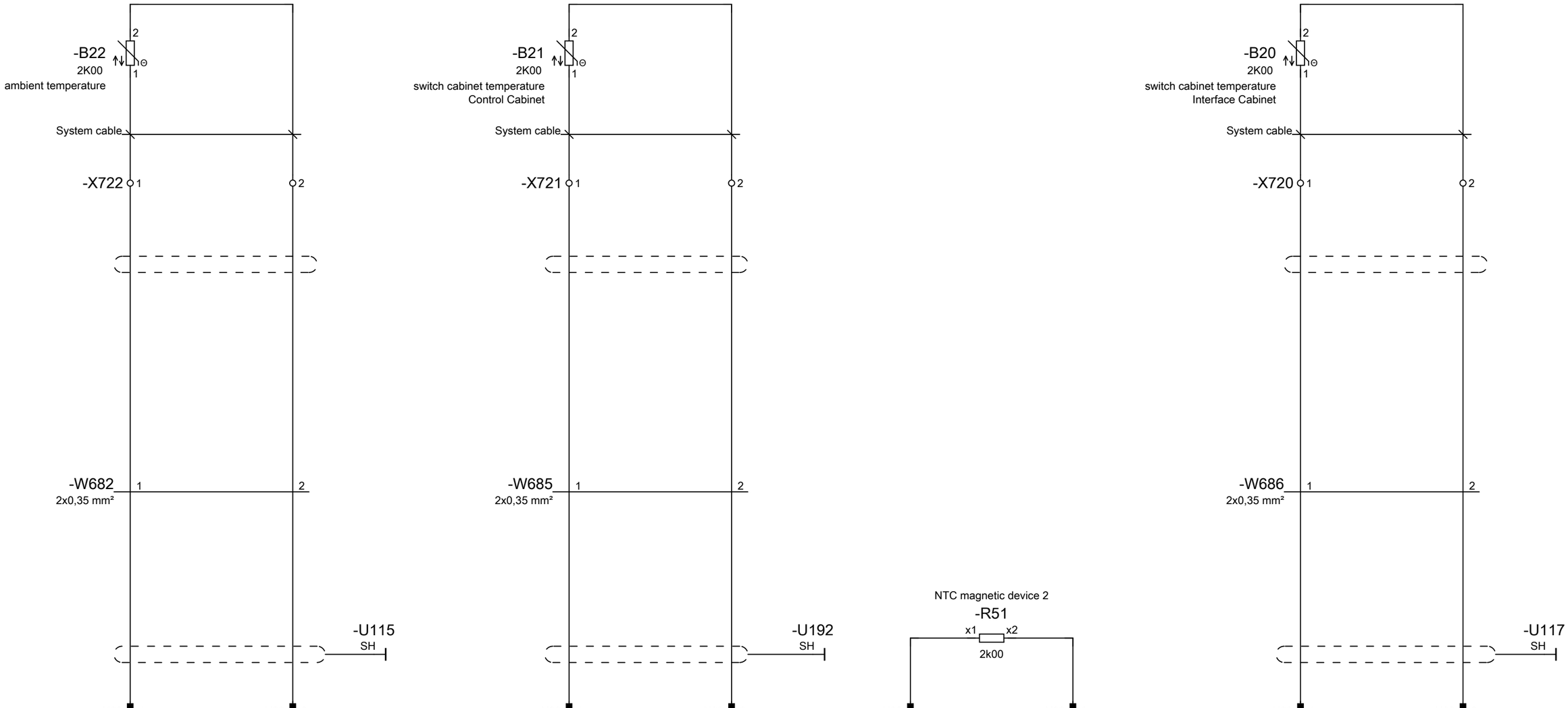

-X63:1	-X63:2
+	AI
-A1	-A1
/O5	/O5
	=SC-A1-X63:2
Temperature sensor Reference voltage	NTC Temperature sensor Supply air

-X60:1	-X60:2
+	AI
-A2	-A2
/O12	/O12
	=SC-A2-X10:2
Temperature sensor Reference voltage	NTC Temperature sensor Power Cabinet

-X62:1	-X62:2
+	AI
-A2	-A2
/O12	/O12
	=SC-A2:1
Temperature sensor Reference voltage	NTC Temperature sensor magnetic device 2

-X60:1	-X60:2
+	AI
-A1	-A1
/O5	/O5
	=SC-A1-X60:2
Temperature sensor Reference voltage	NTC Temperature sensor Control Cabinet

Standard

			Date	11.04.2011	Sunny Central 720-CP-10	SMA Solar Technology AG D-34266 Niestetal +49 (0)561 - 9522 - 0	Control Insulation monitoring	SC-720-CP-10:A	SC-720-CP-10 &EFS M28
			Author	R.Branz					
			Checked	J.Bader					
Modification	Date	Name	Origin		Replacement of	Replaced by			SC-720-CP-10-CEN110910

1	2	3	4	5	6	7	8	9	10
=SC	=SC-X750 = Remote Deactivation Unit Start/Stop External					=SC-X751 = Input Protection transformer			

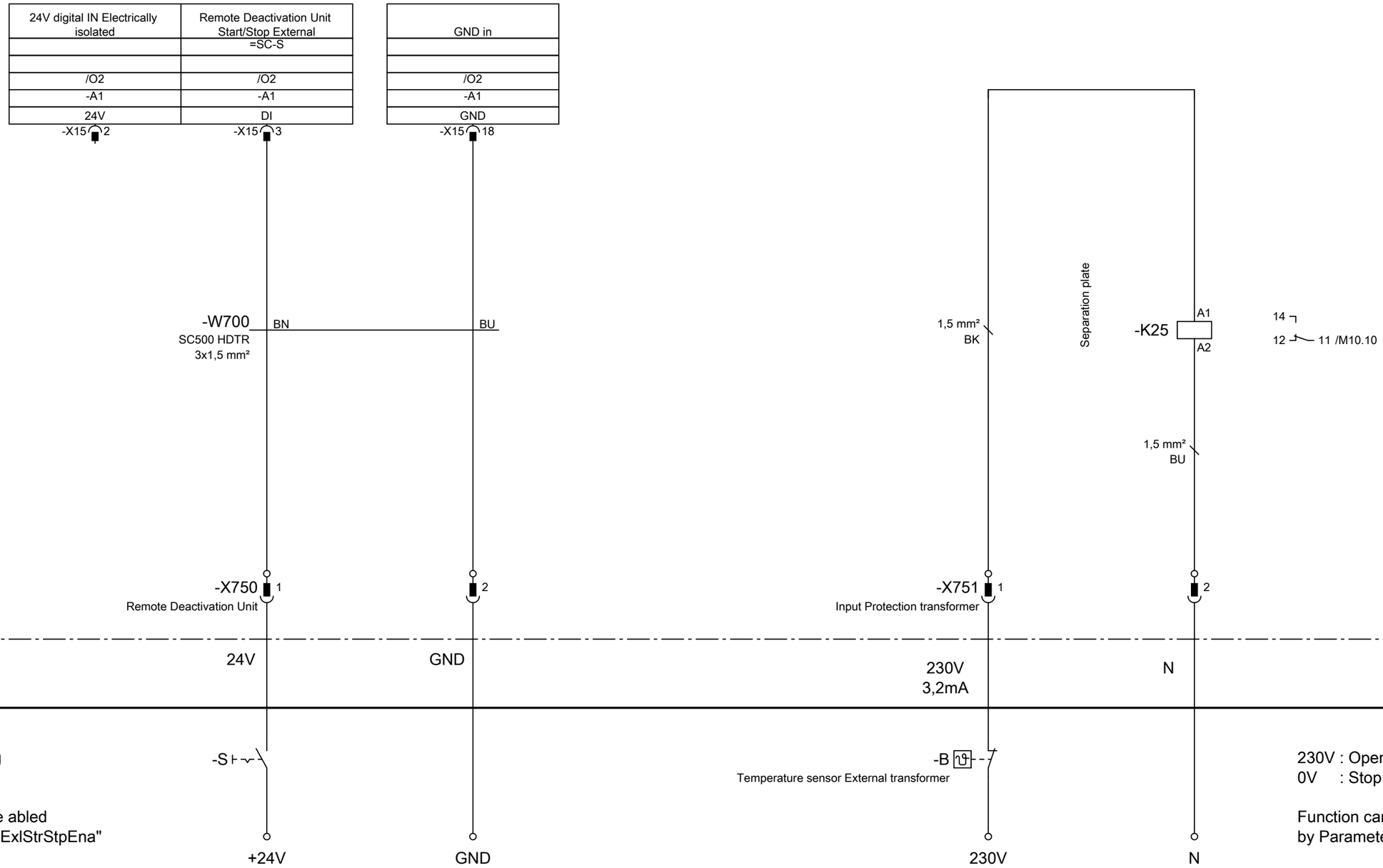

24V : Operating
0 : Stop

Function can be abled
by Parameter " ExlStrStpEna"

230V : Operating
0V : Stop

Function can be disabled
by Parameter" ExlTrfErrEna"

Not included in delivery

Remote Deactivation Unit

Input Protection transformer

Standard

			Date	07.04.2011	Sunny Central 720-CP-10	SMA Solar Technology AG D-34266 Niestetal +49 (0)561 - 9522 - 0	message and Signals External Remote Deactivation Unit , Input Protection transformer	SC-720-CP-10:A	SC-720-CP-10	&EFS
			Author	R.Branz						M29
			Checked	J.Bader						
Modification	Date	Name	Origin		Replacement of	Replaced by			SC-720-CP-10-CEN110910	

1	2	3	4	5	6	7	8	9	10

=SC

=SC-X725 = External Predefined setpoint Reactive power , Effective power

External Predefined setpoint Reactive power +	External Predefined setpoint Reactive power -	Voltage / power supply by customer NC	Actual voltage value from External	External Predefined setpoint Effective power -	External Predefined setpoint Effective power -
	=SC-X725:2				=SC-X725:4
/O5	/O5	/O5	/O5	/O5	/O5
-A1	-A1	-A1	-A1	-A1	-A1
0-10V / 4-24mA	AI	0-10V / 4-24mA	AI	0-10V / 4-24mA	AI

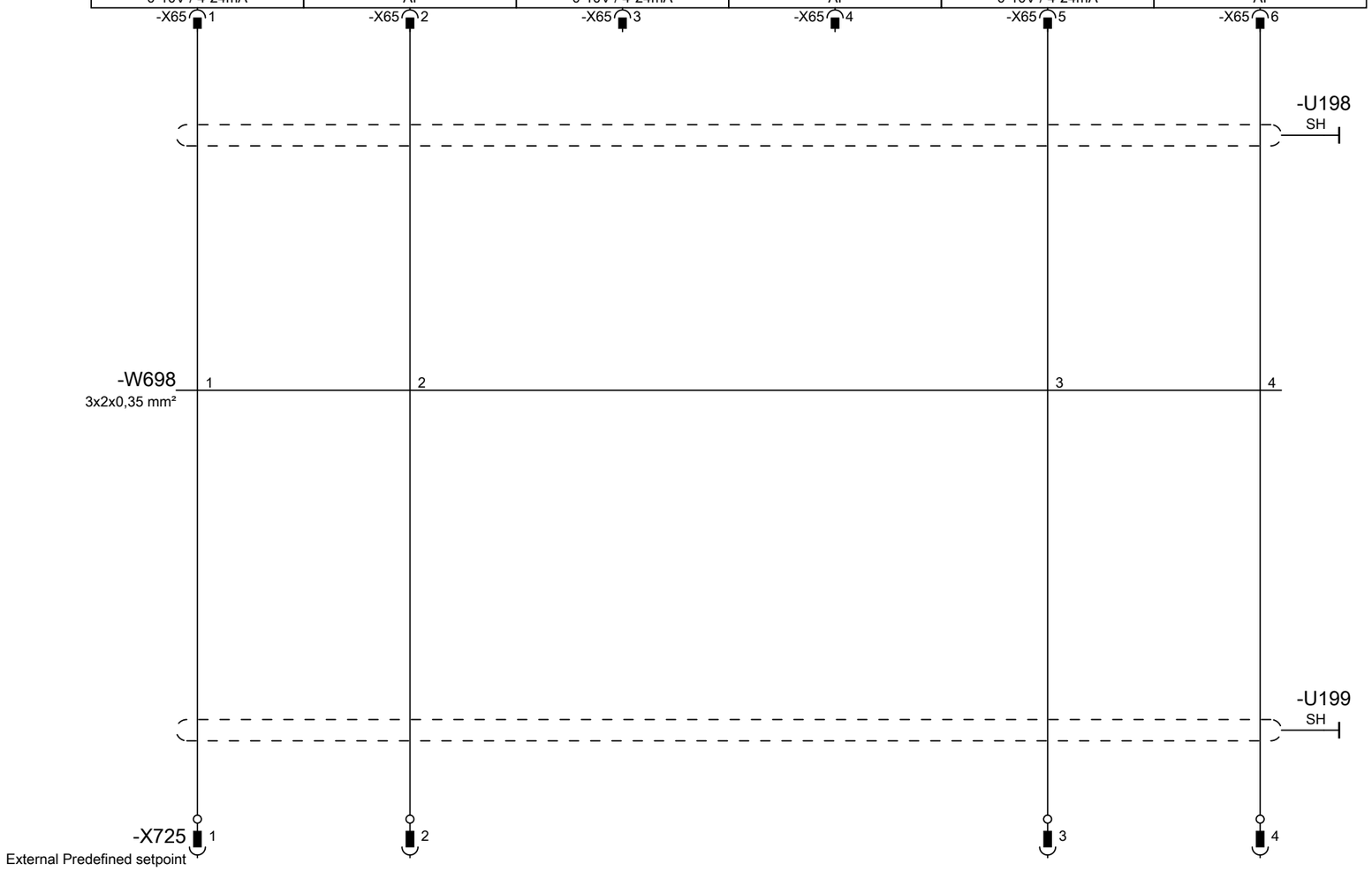

+ - + -

External
Predefined setpoint Reactive power

External
Predefined setpoint Effective power

Standard

			Date	07.04.2011	Sunny Central 720-CP-10	SMA Solar Technology AG D-34266 Niestetal +49 (0)561 - 9522 - 0	External Predefined setpoint Reactive power , Effective power	SC-720-CP-10:A	SC-720-CP-10 &EFS M30
			Author	R.Branz					
			Checked	J.Bader					
Modification	Date	Name	Origin		Replacement of / Replaced by			SC-720-CP-10-CEN110910	

1	2	3	4	5	6	7	8	9	10
=SC	=SC-X752 = Warning Insulation monitoring External					=14_4-X760 = Immediate-Stopp External			
	Insulation monitoring		Insulation monitoring						
	ok		nok						

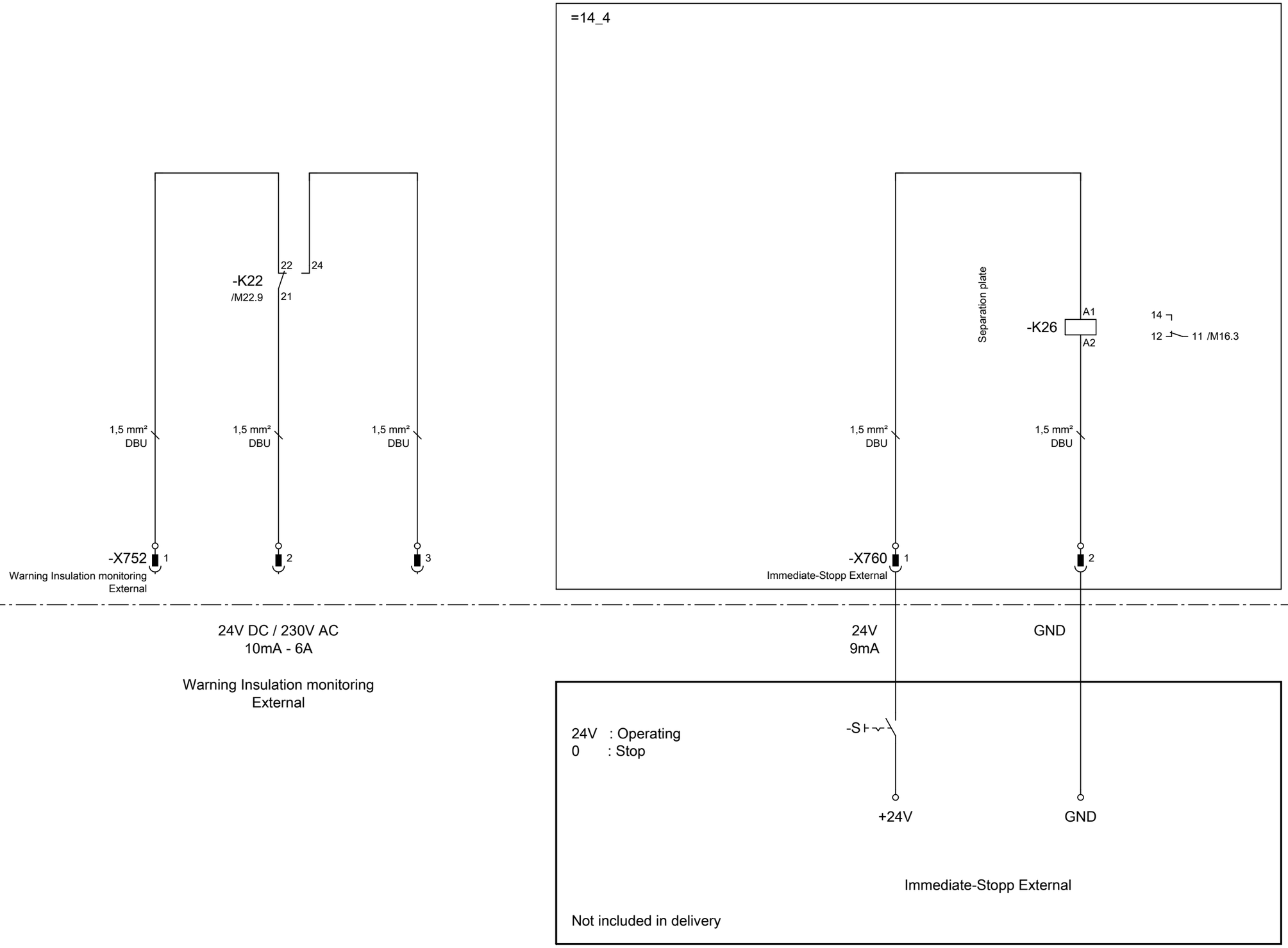

Standard
Option 14_4

			Date	07.04.2011	Sunny Central 720-CP-10	SMA Solar Technology AG D-34266 Niestetal +49 (0)561 - 9522 - 0	External Warning Insulation monitoring Immediate-Stopp	SC-720-CP-10:A	SC-720-CP-10 &EFS M31	
			Author	R.Branz						
			Checked	J.Bader					SC-720-CP-10-CEN110910	
Modification	Date	Name	Origin		Replacement of	Replaced by				

1	2	3	4	5	6	7	8	9	10

=SC

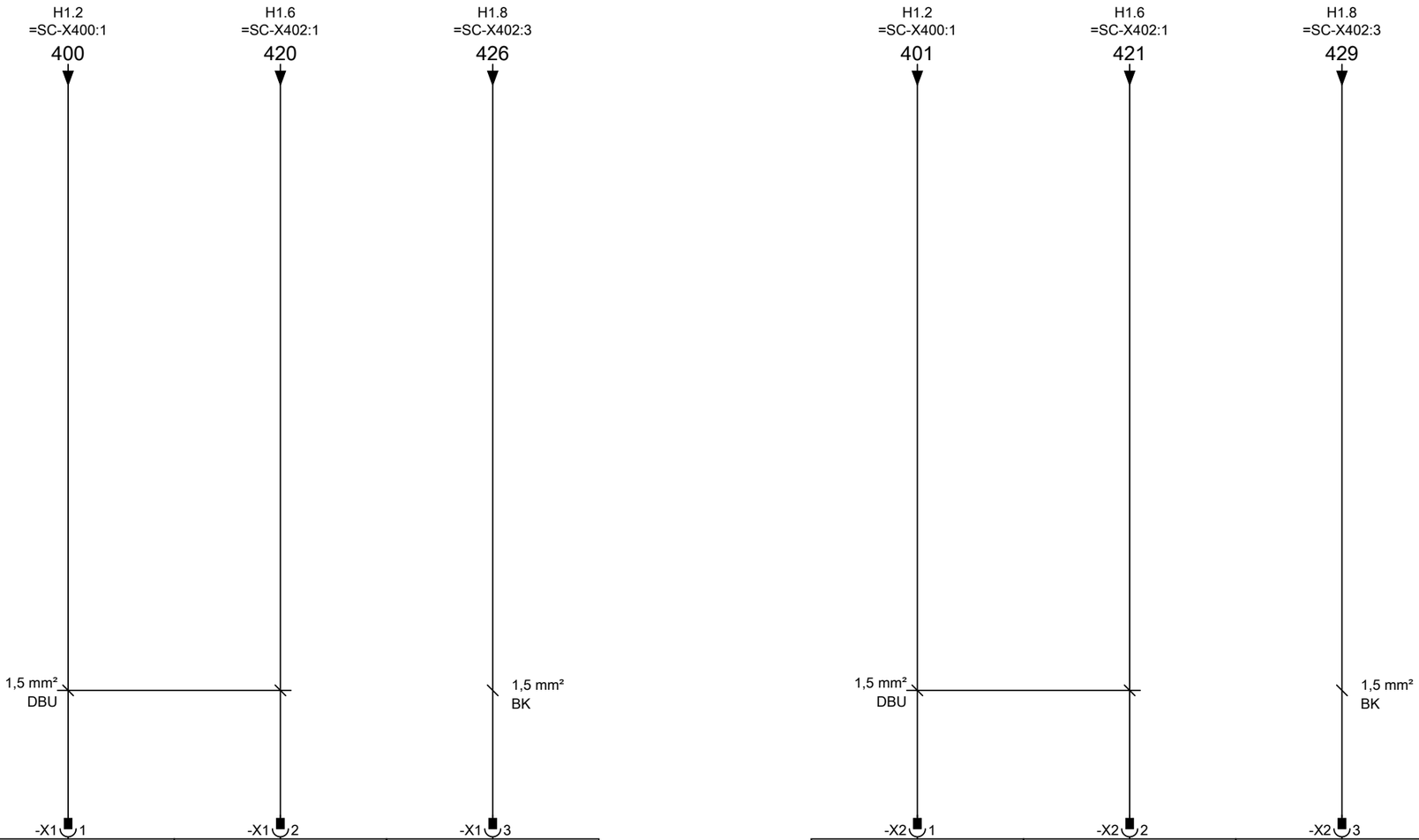

24V	GND	PE
-A1	-A1	-A1
/O1	/O1	/O1
Power supply Master 1	Power supply Master 1	Power supply Master 1

24V	GND	PE
-A1	-A1	-A1
/O1	/O1	/O1
Power supply Master 2	Power supply Master 2	Power supply Master 2

Standard

			Date	07.04.2011	Sunny Central 720-CP-10	SMA	SMA Solar Technology AG D-34266 Niestetal +49 (0)561 - 9522 - 0	SC20CONT.GR-S1 Power supply 24V DC X1 Master 1 and X2 Master 2	SC-720-CP-10:A	SC-720-CP-10 &EFS
			Author	R.Branz						N1
			Checked	J.Bader						
Modification	Date	Name	Origin		Replacement of	Replaced by			SC-720-CP-10-CEN110910	

1	2	3	4	5	6	7	8	9	10
=SC	Power supply			Power supply			Power supply		
	BFR			BFR			BFR		
	L1			L2			L3		

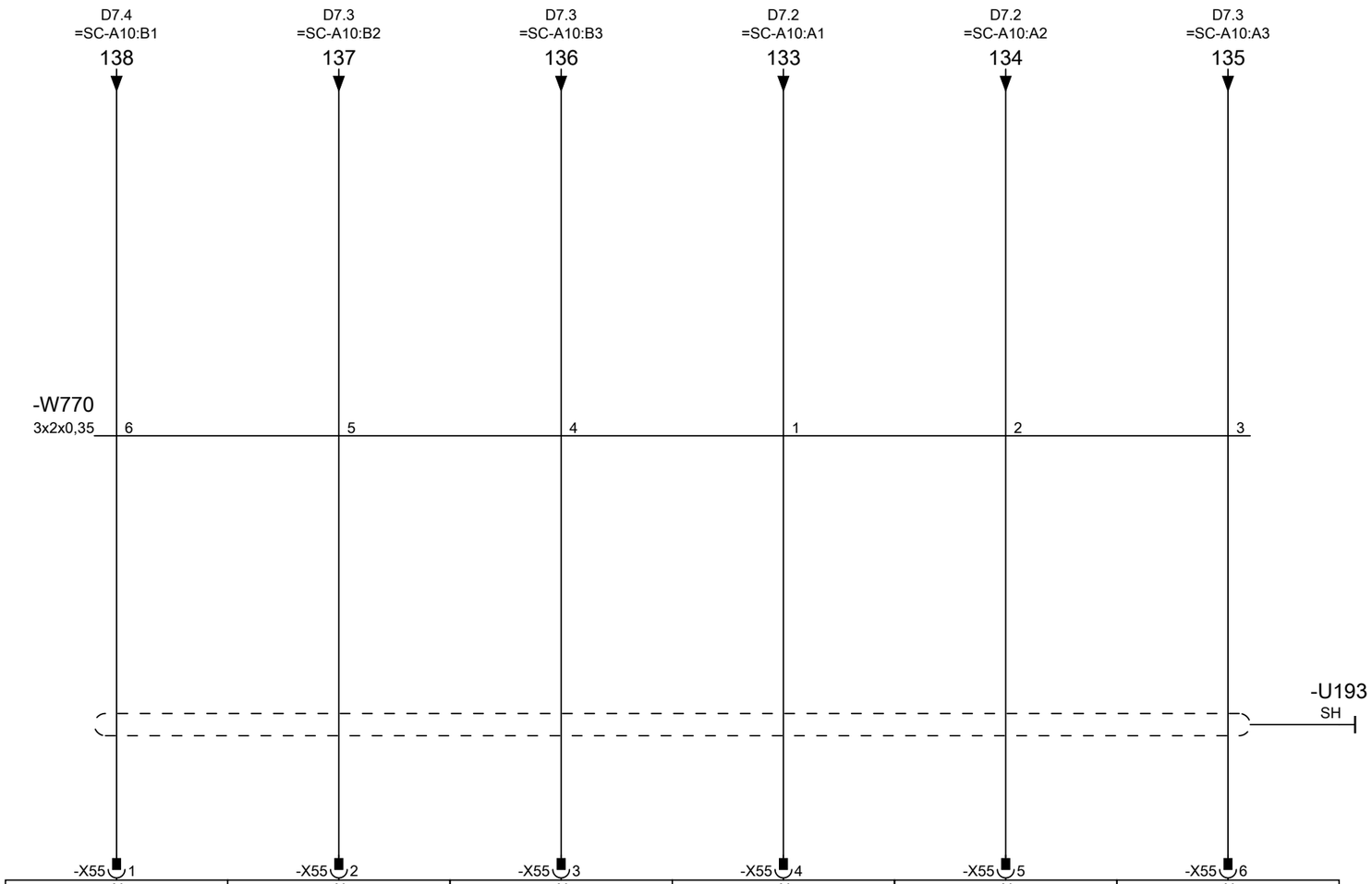

AI	AI	AI	AI	AI	AI
-A1	-A1	-A1	-A1	-A1	-A1
/O4	/O4	/O4	/O4	/O4	/O4
=SC-A10:B1	=SC-A10:B2	=SC-A10:B3	=SC-A10:A1	=SC-A10:A2	=SC-A10:A3
Voltage L1 Grid side	Voltage L1_2 Grid side	Voltage L2 Grid side	Voltage L2_2 Grid side	Voltage L3 Grid side	Voltage L3_2 Grid side

Standard

			Date	07.04.2011	Sunny Central 720-CP-10	SMA Solar Technology AG D-34266 Niestetal +49 (0)561 - 9522 - 0	SC20CONT.GR-S1 Voltage L1, L2 and L3 Grid side X55	SC-720-CP-10:A	SC-720-CP-10 &EFS N2
			Author	R.Branz					
			Checked	J.Bader					
Modification	Date	Name	Origin		Replacement of	Replaced by		SC-720-CP-10-CEN110910	

1	2	3	4	5	6	7	8	9	10
=SC	Power supply			Power supply			Power supply		
	DSP			DSP			DSP		
	L1			L2			L3		

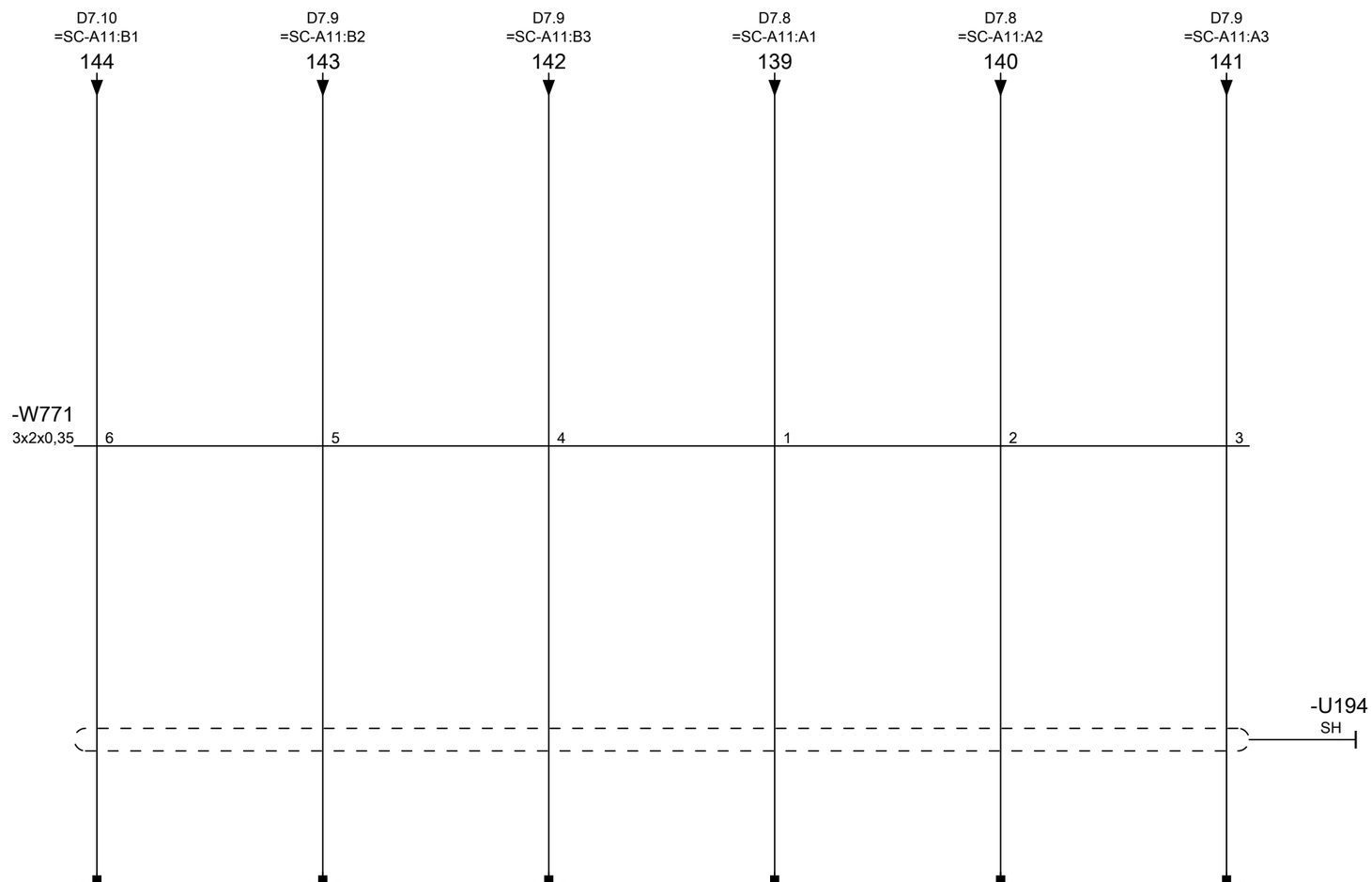

-X56 1	-X56 2	-X56 3	-X56 4	-X56 5	-X56 6
AI	AI	AI	AI	AI	AI
-A1	-A1	-A1	-A1	-A1	-A1
/O4	/O4	/O4	/O4	/O4	/O4
=SC-A11:B1	=SC-A11:B2	=SC-A11:B3	=SC-A11:A1	=SC-A11:A2	=SC-A11:A3
Voltage L1 Grid side (monitoring)	Voltage L1_2 Grid side (monitoring)	Voltage L2 Grid side (monitoring)	Voltage L2_2 Grid side (monitoring)	Voltage L3 Grid side (monitoring)	Voltage L3_2 Grid side (monitoring)

Standard

			Date	07.04.2011	Sunny Central 720-CP-10	SMA Solar Technology AG D-34266 Niestetal +49 (0)561 - 9522 - 0	SC20CONT.GR-S1 Voltage L1, L2 and L3 Grid side X56	SC-720-CP-10:A	SC-720-CP-10 &EFS N3
			Author	R.Branz					
			Checked	J.Bader					
Modification	Date	Name	Origin		Replacement of	Replaced by		SC-720-CP-10-CEN110910	

1	2	3	4	5	6	7	8	9	10
=SC		L1		L2		L3			

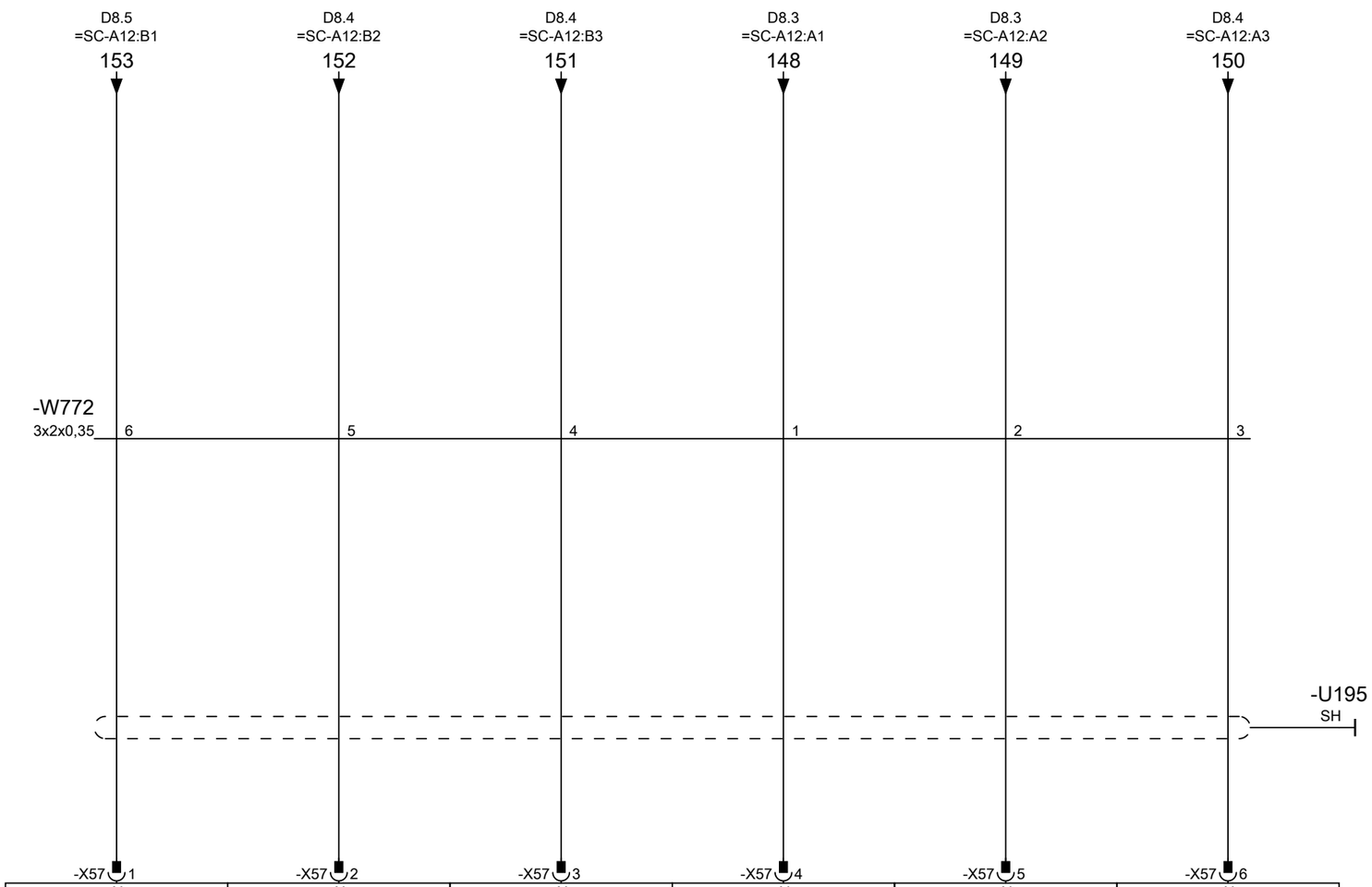

-X57 1	-X57 2	-X57 3	-X57 4	-X57 5	-X57 6
AI	AI	AI	AI	AI	AI
-A1	-A1	-A1	-A1	-A1	-A1
/O5	/O5	/O5	/O5	/O5	/O5
=SC-A12:B1	=SC-A12:B2	=SC-A12:B3	=SC-A12:A1	=SC-A12:A2	=SC-A12:A3
Voltage L1 inverter	Voltage L1_2 inverter	Voltage L2 inverter	Voltage L2_2 inverter	Voltage L3 inverter	Voltage L3_2 inverter

Standard

			Date	07.04.2011	Sunny Central 720-CP-10	SMA Solar Technology AG D-34266 Niestetal +49 (0)561 - 9522 - 0	SC20CONT.GR-S1 Voltage L1, L2 and L3 converter X57	SC-720-CP-10:A	SC-720-CP-10 &EFS N4
			Author	R.Branz					
			Checked	J.Bader					
Modification	Date	Name	Origin		Replacement of	Replaced by		SC-720-CP-10-CEN110910	

1	2	3	4	5	6	7	8	9	10
=SC	U_PV				U_ZWK				

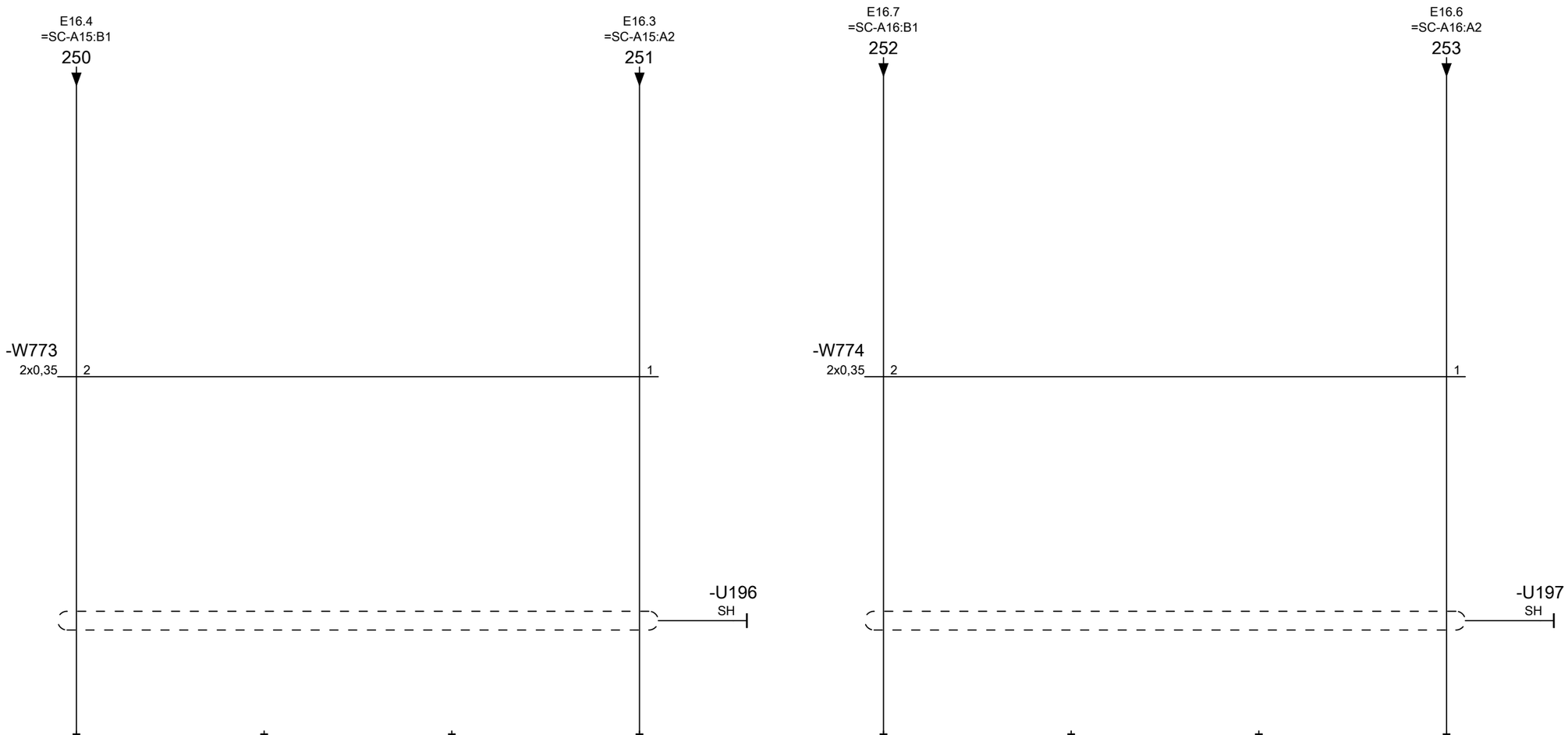

-X58:1	-X58:2	-X58:3	-X58:4
AI	NC	NC	AI
-A1	-A1	-A1	-A1
/O5	/O5		
=SC-A15:B1			=SC-A15:A2
Voltage PV minus (UPV-)	Spare N.C.	Spare N.C.	Voltage PV plus (UPV+)

-X59:1	-X59:2	-X59:3	-X59:4
AI	NC	NC	AI
-A1	-A1	-A1	-A1
/O5	/O5		
=SC-A16:B1			=SC-A16:A2
Voltage Auxiliary circuit negativ (UKWK-)	Spare N.C.	Spare N.C.	Voltage Auxiliary circuit positiv (UKWK+)

Standard

			Date	07.04.2011	Sunny Central 720-CP-10	SMA Solar Technology AG D-34266 Niestetal +49 (0)561 - 9522 - 0	SC20CONT.GR-S1 Voltage measurement PV X58 and Auxiliary circuit X59	SC-720-CP-10:A	SC-720-CP-10 &EFS
			Author	R.Branz					N5
			Checked	J.Bader					
Modification	Date	Name	Origin		Replacement of	Replaced by		SC-720-CP-10-CEN110910	

1	2	3	4	5	6	7	8	9	10
=SC	Power supply	Power supply	measurement	measurement		Power supply	Power supply	measurement	measurement
	+15V	-15V	Out	GND		+15V	-15V	Out	GND

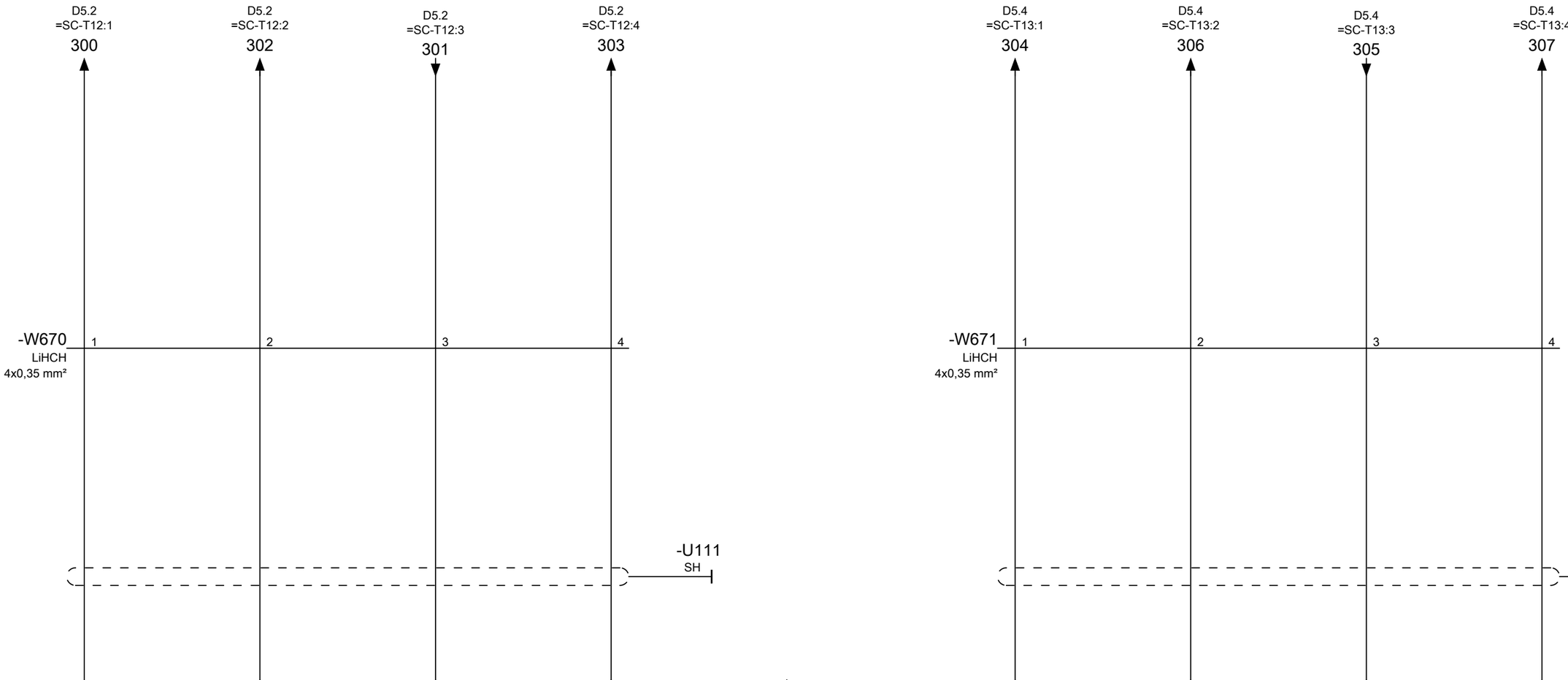

-X50:1	-X50:2	-X50:3	-X50:4	-X50:5
+15V	-15V	AI	AGND	NC
-A1	-A1	-A1	-A1	-A1
/O4	/O4	/O4	/O4	/O4
		=SC-T12:3		
+15V Measurement AC-current L1	-15V Measurement AC-current L1	AC-current L1	Ground Analog measurement	N.C.

-X51:1	-X51:2	-X51:3	-X51:4	-X51:5
+15V	-15V	AI	AGND	NC
-A1	-A1	-A1	-A1	-A1
/O4	/O4	/O4	/O4	/O4
		=SC-T13:3		
+15V Measurement AC-current L2	-15V Measurement AC-current L2	AC-current L2	Ground Analog measurement	N.C.

Standard

			Date	07.04.2011	Sunny Central 720-CP-10	SMA Solar Technology AG D-34266 Niestetal +49 (0)561 - 9522 - 0	SC20CONT.GR-S1 Measurement AC-current L1 X50 Measurement AC current L2 X51	SC-720-CP-10:A	SC-720-CP-10 &EFS N6
			Author	R.Branz					
			Checked	J.Bader					
Modification	Date	Name	Origin		Replacement of / Replaced by			SC-720-CP-10-CEN110910	

1	2	3	4	5	6	7	8	9	10
=SC	Power supply	Power supply	measurement	measurement		Power supply	Power supply	measurement	measurement
	+15V	-15V	Out	GND		+15V	-15V	Out	GND

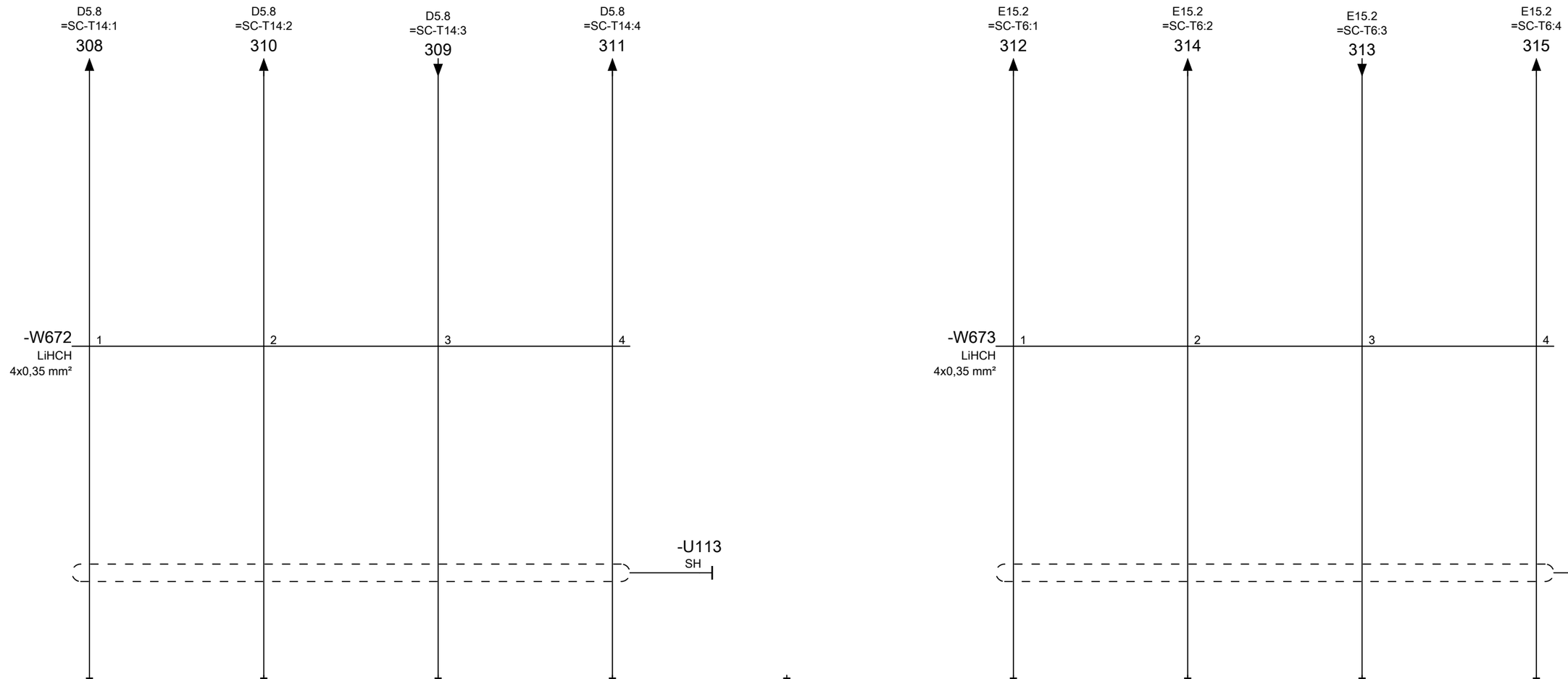

-X52:1	-X52:2	-X52:3	-X52:4	-X52:5
+15V	-15V	AI	AGND	NC
-A1	-A1	-A1	-A1	-A1
/O4	/O4	/O4	/O4	/O4
		=SC-T14:3		
+15V Measurement AC-current L3	-15V Measurement AC-current L3	AC-current L3	Ground Analog measurement	N.C.

-X53:1	-X53:2	-X53:3	-X53:4	-X53:5
+15V	-15V	AI	AGND	NC
-A1	-A1	-A1	-A1	-A1
/O4	/O4	/O4	/O4	/O4
		=SC-T6:3		
+15V Measurement PV-current	-15V Measurement PV-current	DC current PV	Ground Analog measurement	N.C.

Standard

			Date	07.04.2011	Sunny Central 720-CP-10	SMA Solar Technology AG D-34266 Niestetal +49 (0)561 - 9522 - 0	SC20CONT.GR-S1 Measurement AC-current L3 X52 Measurement DC-current PV X53	SC-720-CP-10:A	SC-720-CP-10 &EFS N7
			Author	R.Branz					
			Checked	J.Bader					
Modification	Date	Name	Origin		Replacement of / Replaced by			SC-720-CP-10-CEN110910	

=SC

-A1
SC20CONT.GR-S1

-X1			
24V	1	/N1.2	Power supply Master 1
GND	2	/N1.3	Power supply Master 1
PE	3	/N1.4	Power supply Master 1
-X2			
24V	1	/N1.6	Power supply Master 2
GND	2	/N1.7	Power supply Master 2
PE	3	/N1.8	Power supply Master 2
-X3			
DO	1	/M4.2	Contactor Power supply External On
GND	2	/M4.3	GND
-X10			
24V	1	/M8.1	24V rapid deactivation
24V	2	/M8.2	24V rapid deactivation
DI	3	/M8.3	rapid deactivation overtemperature magnetic device 1
DI	4	/M8.4	rapid deactivation Option N.C.
DI	5	/M8.5	rapid deactivation Atmel
24V	6	/M8.6	24V rapid deactivation
24V	7	/M8.7	24V rapid deactivation
DI	8	/M8.8	door contact 1
DI	9	/M8.9	rapid deactivation Option N.C.
DI	10	/M8.10	rapid deactivation Atmel
24V	11	/M9.1	24V
24V	12	/M9.2	24V rapid deactivation
DI	13	/M9.3	rapid deactivation 1
DI	14	/M9.4	rapid deactivation Option N.C.
DI	15	/M9.5	Temperature sensor 75°C Control Cabinet
DI	16	/M9.6	N.C.

-A1
SC20CONT.GR-S1

-X11			
24V	1	/M10.1	24V
24V	2	/M10.2	24V rapid deactivation
DI	3	/M10.3	rapid deactivation Relay grid monitoring / GFDI
DI	4	/M10.4	rapid deactivation Option N.C.
DI	5	/M10.5	feedback GFDI
-X11			
24V	6	/M10.6	24V rapid deactivation
24V	7	/M10.7	24V rapid deactivation
DI	8	/M10.8	Hermetical full protection Medium voltage transformer
DI	9	/M10.9	rapid deactivation Option N.C.
DI	10	/M10.10	rapid deactivation Atmel
-X11			
24V	11	/M11.1	24V rapid deactivation
24V	12	/M11.2	24V rapid deactivation
DI	13	/M11.3	Hardware failure EVR
DI	14	/M11.4	rapid deactivation Option N.C.
DI	15	/M11.5	rapid deactivation Atmel
DI	16	/M11.6	N.C.

=SC

-A1
SC20CONT.GR-S1

-X12

24V	1	/M7.1	24V digital IN without disconnection
DI	2	/M7.2	Power Fail 230V
24V	3		
DI	4		
24V	5		
DI	6		
24V	7	/M7.5	24V digital IN without disconnection
DI	8	/M7.6	feedback Grid contactor
24V	9	/M3.1	24V digital IN without disconnection
DI	10	/M3.2	feedback DC-Switch
24V	11		
DI	12		

-X13

24V	1	/M7.7	24V digital IN without disconnection
DI	2	/M7.8	Key switch Start/Stop
24V	3		
DI	4		
24V	5	/M7.9	24V digital IN without disconnection
DI	6	/M7.10	Discharger
24V	7	/E18.6	24V digital IN without disconnection
DI	8	/E18.7	GFDI signal
24V	9	/M22.5	24V digital IN without disconnection
DI	10	/M22.6	ground fault Warning
24V	11	/M22.7	24V digital IN without disconnection
DI	12	/M22.7	ground fault alarm

-A1
SC20CONT.GR-S1

-X14

24V	1	/M2.2	24V digital IN Electrically isolated
24V	2	/M2.3	24V digital IN Electrically isolated
DI	3	/M2.5	/ AC - power circuit breaker
24V	4		
DI	5		
24V	6		
DI	7		
24V	8		
DI	9		
GND	10	/M2.8	GND in

-X15

24V	1		
24V	2	/M29.2	24V digital IN Electrically isolated
DI	3	/M29.3	Remote Deactivation Unit Start/Stop External
24V	4		
DI	5		
24V	6		
DI	7		
24V	8		
DI	9		
24V	10		
DI	11		
24V	12		
DI	13		
24V	14		
DI	15		
24V	16		
DI	17		
GND	18	/M29.4	GND in

=SC

-A1
SC20CONT.GR-S1

-X20
DI 1
DI 2
GND 3
24V 4

-X21
DI 1
DI 2
GND 3
24V 4

-X22
DI 1
DI 2
GND 3
24V 4

-X23
DI 1
DI 2
GND 3
24V 4

-X24
DI 1
DI 2
GND 3
24V 4

-X25
DI 1
DI 2
GND 3
24V 4

-A1
SC20CONT.GR-S1

-X30
24V 4 /M1.2 Power supply 24V / 230V
DO 3
DO 2 /M1.3 AC-Contactor / AC-Switch On
24V 1

-X31
230V 5 /M3.5 Power supply 230V
DO 4
DO 3 /M3.6 DC-Switch Off/Reset
DO 2 /M3.4 DC-Switch On
230V 1

-X32
230V 6
DO 5
DO 4
DO 3
DO 2
230V 1

-X33
230V 8
DO 7
DO 6
DO 5
DO 4
DO 3
DO 2
230V 1

			Date	07.04.2011	Sunny Central 720-CP-10	SMA Solar Technology AG D-34266 Niestetal +49 (0)561 - 9522 - 0	SC20CONT.GR-S1 overview digital inputs digital outputs	SC-720-CP-10:A
			Author	R.Branz				SC-720-CP-10 &EFS O3
			Checked	J.Bader				
Modification	Date	Name	Origin		Replacement of	Replaced by		SC-720-CP-10-CEN110910

=SC

-A1 SC20CONT.GR-S1

	-X34		
24V	8		
DO	7	/M13.8	Indicator light Operation
DO	6		
DO	5	/M13.6	Indicator light Fault
DO	4		
DO	3	/M13.4	Indicator light Warning
DO	2		
24V	1	/M13.1	transfer 230V N.C.

	-X35		
24V	7	/M3.10	Power supply 24V
DO	6	/M3.9	Undervoltage release DC-Switch
DO	5		
DO	4	/E18.4	GFDI drive Off/reset
DO	3	/E18.3	GFDI drive On
DO	2		
24V	1		

	-X50		
+15V	1	/N6.1	+15V Measurement AC-current L1
-15V	2	/N6.2	-15V Measurement AC-current L1
AI	3	/N6.3	AC-current L1
AGND	4	/N6.4	Ground Analog measurement
NC	5	/N6.5	N.C.

	-X51		
+15V	1	/N6.6	+15V Measurement AC-current L2
-15V	2	/N6.7	-15V Measurement AC-current L2
AI	3	/N6.8	AC-current L2
AGND	4	/N6.9	Ground Analog measurement
NC	5	/N6.10	N.C.

-A1 SC20CONT.GR-S1

	-X52		
+15V	1	/N7.1	+15V Measurement AC-current L3
-15V	2	/N7.2	-15V Measurement AC-current L3
AI	3	/N7.3	AC-current L3
AGND	4	/N7.4	Ground Analog measurement
NC	5	/N7.5	N.C.

	-X53		
+15V	1	/N7.6	+15V Measurement PV-current
-15V	2	/N7.7	-15V Measurement PV-current
AI	3	/N7.8	DC current PV
AGND	4	/N7.9	Ground Analog measurement
NC	5	/N7.10	N.C.

	-X55		
AI	1	/N2.2	Voltage L1 Grid side
AI	2	/N2.3	Voltage L1_2 Grid side
AI	3	/N2.4	Voltage L2 Grid side
AI	4	/N2.5	Voltage L2_2 Grid side
AI	5	/N2.6	Voltage L3 Grid side
AI	6	/N2.7	Voltage L3_2 Grid side

	-X56		
AI	1	/N3.2	Voltage L1 Grid side (monitoring)
AI	2	/N3.3	Voltage L1_2 Grid side (monitoring)
AI	3	/N3.4	Voltage L2 Grid side (monitoring)
AI	4	/N3.5	Voltage L2_2 Grid side (monitoring)
AI	5	/N3.6	Voltage L3 Grid side (monitoring)
AI	6	/N3.7	Voltage L3_2 Grid side (monitoring)

=SC

-A1
SC20CONT.GR-S1

-X57			
AI	1	/N4.2	Voltage L1 inverter
AI	2	/N4.3	Voltage L1_2 inverter
AI	3	/N4.4	Voltage L2 inverter
AI	4	/N4.5	Voltage L2_2 inverter
AI	5	/N4.6	Voltage L3 inverter
AI	6	/N4.7	Voltage L3_2 inverter
-X58			
AI	1	/N5.2	Voltage PV minus (UPV-)
NC	2	/N5.3	Spare N.C.
AI	3		
NC	4		
-X59			
AI	1	/N5.6	Voltage Auxiliary circuit negativ (UKWK-)
NC	2	/N5.7	Spare N.C.
AI	3		
NC	4		
-X60			
+	1	/M28.8	Temperature sensor Reference voltage
AI	2	/M28.9	NTC Temperature sensor Control Cabinet
-X61			
+	1		
AI	2		
-X62			
+	1		
AI	2		
-X63			
+	1	/M28.2	Temperature sensor Reference voltage
AI	2	/M28.3	NTC Temperature sensor Supply air

-A1
SC20CONT.GR-S1

-X64			
+	1		
AI	2		
-X65			
0-10V / 4-24mA	1	/M30.3	External Predefined setpoint Reactive power +
AI	2	/M30.4	External Predefined setpoint Reactive power -
0-10V / 4-24mA	3	/M30.5	Voltage / power supply by customer NC
AI	4	/M30.6	Actual voltage value from External
0-10V / 4-24mA	5	/M30.7	External Predefined setpoint Effective power -
AI	6	/M30.7	External Predefined setpoint Effective power -
-X66			
0-10V / 4-20mA	1	/M22.2	Voltage / power supply
AI	2	/M22.3	isolation resistor
0-10V / 4-20mA	3		
AI	4		
0-10V / 4-20mA	5		
AI	6		
-X70			
24V	1		
GND	2		
DI	3		
DI	4		
DI	5		
DI	6		
DI	7		
DI	8		

=SC

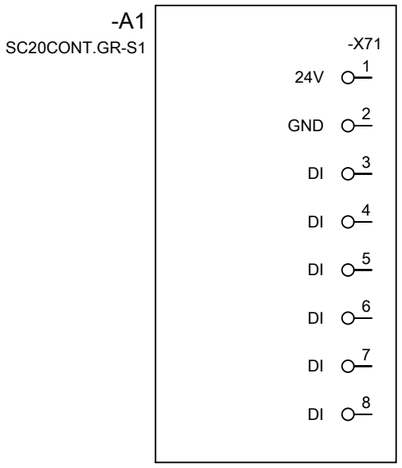

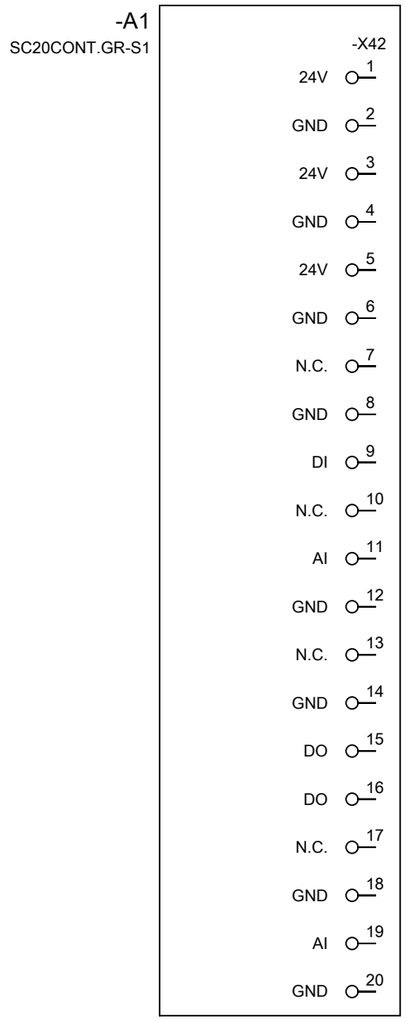

			Date	07.04.2011	Sunny Central 720-CP-10	SMA Solar Technology AG D-34266 Niestetal +49 (0)561 - 9522 - 0	SC20CONT.GR-S1 overview CAN Bus Slave 2 control IGBT 1	SC-720-CP-10:A	SC-720-CP-10 &EFS
			Author	R.Branz					O6
			Checked	J.Bader					
Modification	Date	Name	Origin		Replacement of	Replaced by		SC-720-CP-10-CEN110910	

=SC

-A1
SC20CONT.GR-S1

-X84

DI	1		
GND	2	/R3.4	GND
DI	3	/R3.3	Communication D+
DI	4		
DI	5		
DI	6	/R3.5	Communication D-
DI	7		
+12V	8	/R3.5	+12V Power supply Sunny Display

-X85

DI	1		
GND	2	/R7.2	GND
DI	3	/R7.3	Communication D+
DI	4	/R7.4	Communication D-
DI	5		
DI	6		
DI	7		
+12V	8	/R7.1	+12V Power supply Sunny Display

=SC

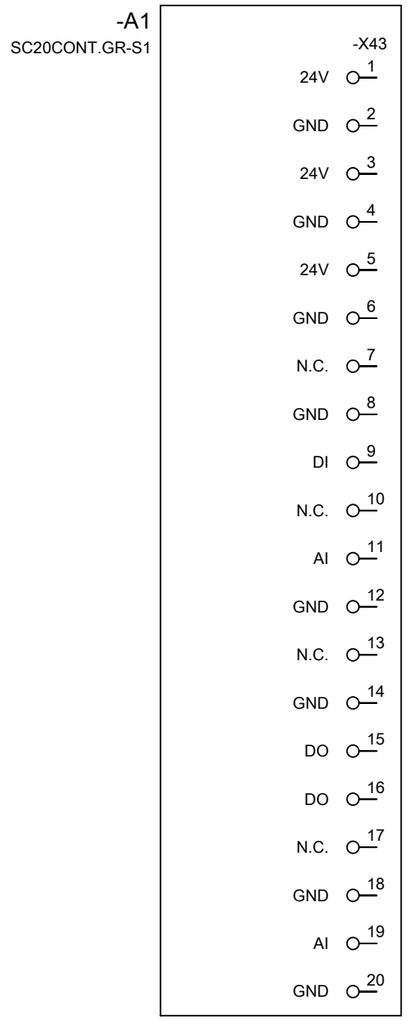

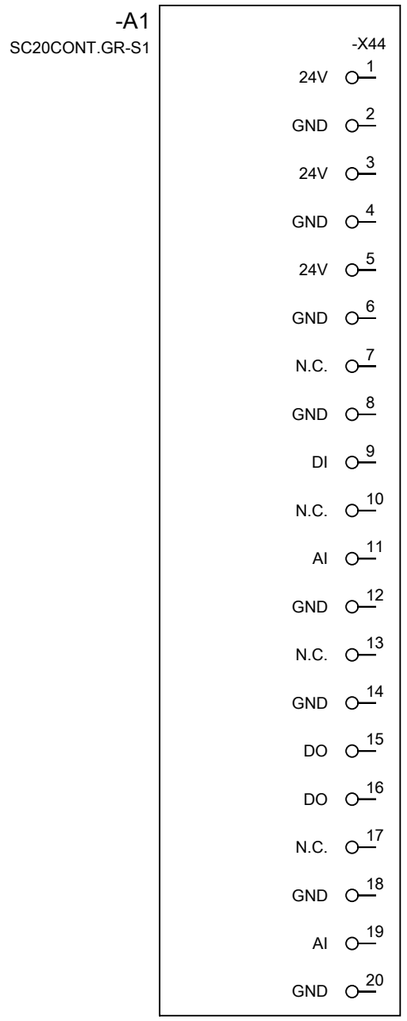

			Date	07.04.2011	Sunny Central 720-CP-10	SMA Solar Technology AG D-34266 Niestetal +49 (0)561 - 9522 - 0	SC20CONT.GR-S1 overview control IGBT 2 control IGBT 3	SC-720-CP-10:A	SC-720-CP-10	&EFS
			Author	R.Branz						O8
			Checked	J.Bader						
Modification	Date	Name	Origin		Replacement of	Replaced by			SC-720-CP-10-CEN110910	

=SC

-A2
SC20CAIO.GR1

-X70

24V	1
GND	2
DI	3
DI	4
DI	5
DI	6
DI	7
DI	8

-X71

24V	1
GND	2
DI	3
DI	4
DI	5
DI	6
DI	7
DI	8

-A2
SC20CAIO.GR1

-X10

24V	1	/M14.1	24V rapid deactivation
24V	2	/M14.2	24V rapid deactivation
DI	3	/M14.3	rapid deactivation overtemperature magnetic device 2
DI	4	/M14.4	rapid deactivation Option N.C.
DI	5	/M14.5	rapid deactivation Atmel

-X10

24V	6	/M14.6	24V rapid deactivation
24V	7	/M14.7	24V rapid deactivation
DI	8	/M14.8	door contact 2
DI	9	/M14.9	rapid deactivation Option N.C.
DI	10	/M14.10	rapid deactivation Atmel

-X10

24V	11	/M15.1	24V
24V	12	/M15.2	24V rapid deactivation
DI	13	/M15.3	rapid deactivation 2
DI	14	/M15.4	rapid deactivation Option N.C.
DI	15	/M15.5	Temperature.sensor 75°C Power Cabinet

-X10

DI	16	/M15.6	N.C.

=SC

-A2 SC20CAIO.GR1

-X11			
24V	1	/M16.1	24V Spare Input
24V	2	/M16.2	24V Spare Input
DI	3	/M16.3	Spare Input
DI	4	/M16.4	rapid deactivation Option N.C.
DI	5	/M16.5	rapid deactivation Atmel
-X11			
24V	6	/M16.6	24V Spare Input
24V	7	/M16.7	24V Spare Input
DI	8	/M16.8	Spare Input
DI	9	/M16.9	rapid deactivation Option N.C.
DI	10	/M16.10	rapid deactivation Atmel
-X11			
24V	11	/M17.1	24V Spare Input
24V	12	/M17.2	24V Spare Input
DI	13	/M17.3	Spare Input
DI	14	/M17.4	rapid deactivation Option N.C.
DI	15	/M17.5	rapid deactivation Atmel
-X11			
DI	16	/M17.6	N.C.

-A2 SC20CAIO.GR1

-X12			
24V	1	/M6.4	24V digital IN Without galvanic isolation
DI	2	/M6.5	failure message Fan 2
24V	3	/M7.3	24V
DI	4	/M7.4	Hygrostat
24V	5		
DI	6		
24V	7		
DI	8		
24V	9		
DI	10		
24V	11		
DI	12		
-X14			
24V	1		
24V	2		
DI	3		
24V	4		
DI	5		
24V	6		
DI	7		
24V	8		
DI	9		
24V	10		
DI	11		
24V	12		
DI	13		
GND	14		

=SC

-A2
SC20CAIO.GR1

-X20			
DI	1	/M6.8	Rated speed Fan heat sink 2
DI	2		
GND	3	/M6.9	GND_B6 N.C.
24V	4	/M6.7	24V Power supply N.C.
-X21			
DI	1		
DI	2		
GND	3		
24V	4		
-X22			
DI	1		
DI	2		
GND	3		
24V	4		
-X23			
DI	1		
DI	2		
GND	3		
24V	4		
-X24			
DI	1	/M5.5	Nominal value Rated speed Fan E100
DI	2	/M5.4	feedback Rated speed Fan E100
GND	3	/M5.6	GND
24V	4		
-X25			
DI	1	/M5.9	Nominal value Rated speed Fan E101
DI	2	/M5.8	feedback Rated speed Fan E101
GND	3	/M5.10	GND
24V	4		

-A2
SC20CAIO.GR1

-X30			
230V	5	/M4.9	Power supply 230V
DO	4		
DO	3		
DO	2	/M4.9	Heating 2
230V	1		
-X31			
230V	8		
DO	7		
DO	6		
DO	5		
DO	4		
DO	3		
DO	2		
230V	1		
-X32			
230V	8		
DO	7		
DO	6		
DO	5		
DO	4		
DO	3		
DO	2		
230V	1		

=SC

-A2
SC20CAIO.GR1

-X60

+ 1	/M28.4	Temperature sensor Reference voltage
AI 2	/M28.5	NTC Temperature sensor Power Cabinet

-X61

+ 1		
AI 2		

-X62

+ 1	/M28.6	Temperature sensor Reference voltage
AI 2	/M28.7	NTC Temperature sensor magnetic device 2

-X63

+ 1		
AI 2		

-X64

+ 1		
AI 2		

-X65

AI 1	/M6.9	Voltage measurement Spare 1 +
AI 2	/M6.10	Voltage measurement Spare 1 -
AI 3		
AI 4		
AI 5		
AI 6		

-A2
SC20CAIO.GR1

-X92

DI 1	
DI 2	
N.C. 3	
N.C. 4	
N.C. 5	
N.C. 6	
N.C. 7	
N.C. 8	
GND 9	

			Date	07.04.2011	Sunny Central 720-CP-10	SMA Solar Technology AG D-34266 Niestetal +49 (0)561 - 9522 - 0	SC20CAIO.GR1 overview Analog inputs inputs CAN Bus coding	SC-720-CP-10:A	SC-720-CP-10 &EFS
			Author	R.Branz					O12
			Checked	J.Bader					
Modification	Date	Name	Origin		Replacement of	Replaced by		SC-720-CP-10-CEN110910	

1	2	3	4	5	6	7	8	9	10

=SC

-X407 = Control voltage 42L+ , 42L-

-X26 = Voltage supply Communication

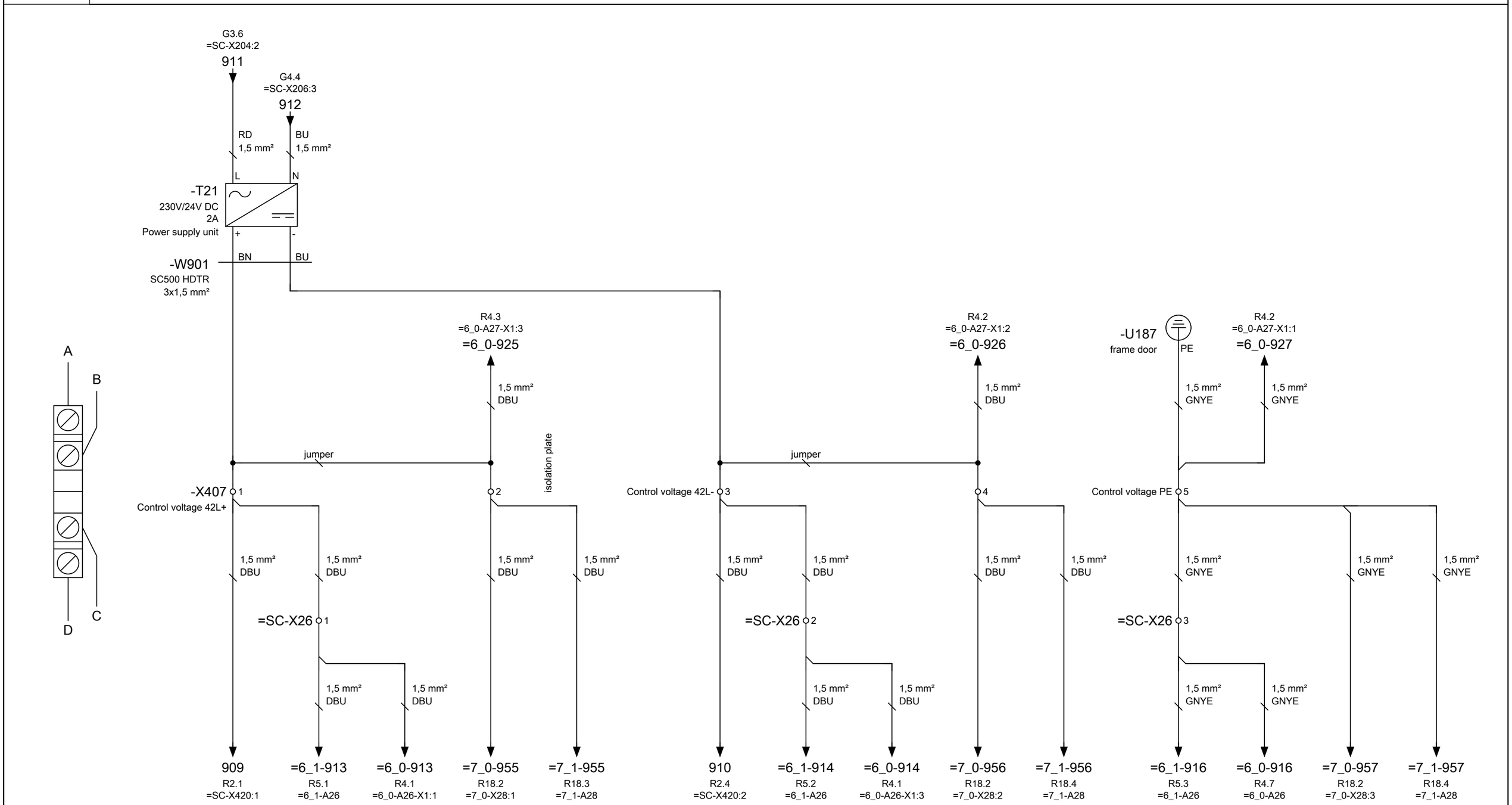

Standard
Option 6_0
Option 6_1
Option 7_0
Option 7_1

Notice:
Terminal SC-X26 is not used at Option 6_0 and Option 6_1

			Date	07.04.2011	Sunny Central 720-CP-10	SMA	SMA Solar Technology AG D-34266 Niestetal +49 (0)561 - 9522 - 0	Communication Power supply X407	SC-720-CP-10:A	SC-720-CP-10	&EFS
			Author	R.Branz							R1
			Checked	J.Bader						SC-720-CP-10-CEN110910	
Modification	Date	Name	Origin		Replacement of	Replaced by					

1	2	3	4	5	6	7	8	9	10

=SC

-X420 = Power supply SCSMC , WEBBOX

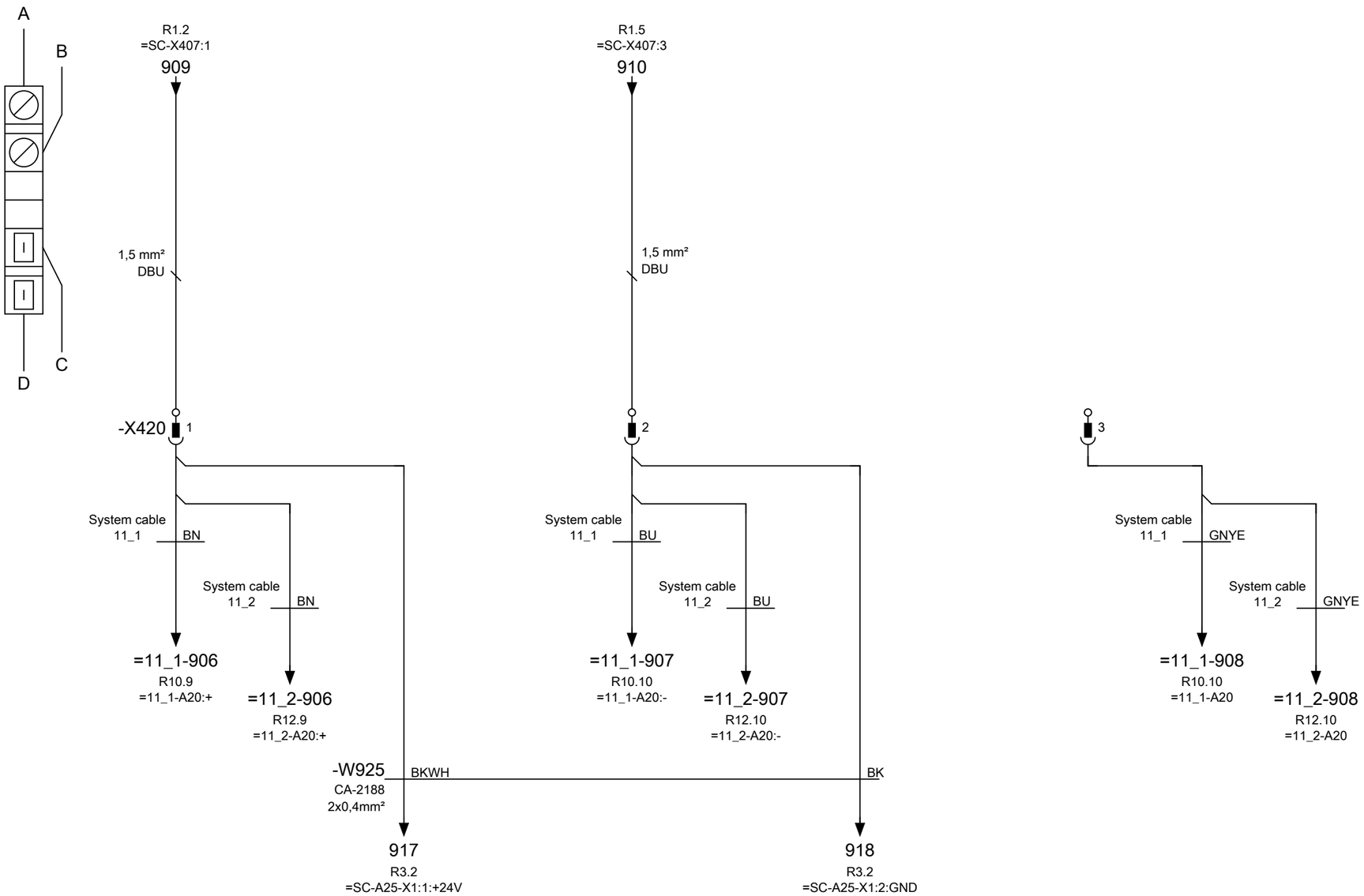

Standard
Option 11_1
Option 11_2

			Date	07.04.2011	Sunny Central 720-CP-10	SMA	SMA Solar Technology AG D-34266 Niestetal +49 (0)561 - 9522 - 0	Communication Power supply X420	SC-720-CP-10:A	SC-720-CP-10	&EFS
			Author	R.Branz							R2
			Checked	J.Bader							
Modification	Date	Name	Origin		Replacement of	Replaced by				SC-720-CP-10-CEN110910	

1	2	3	4	5	6	7	8	9	10

=SC

-A25-X1 = Power supply Sunny Webbox

-A25-X10 = Communication Webbox

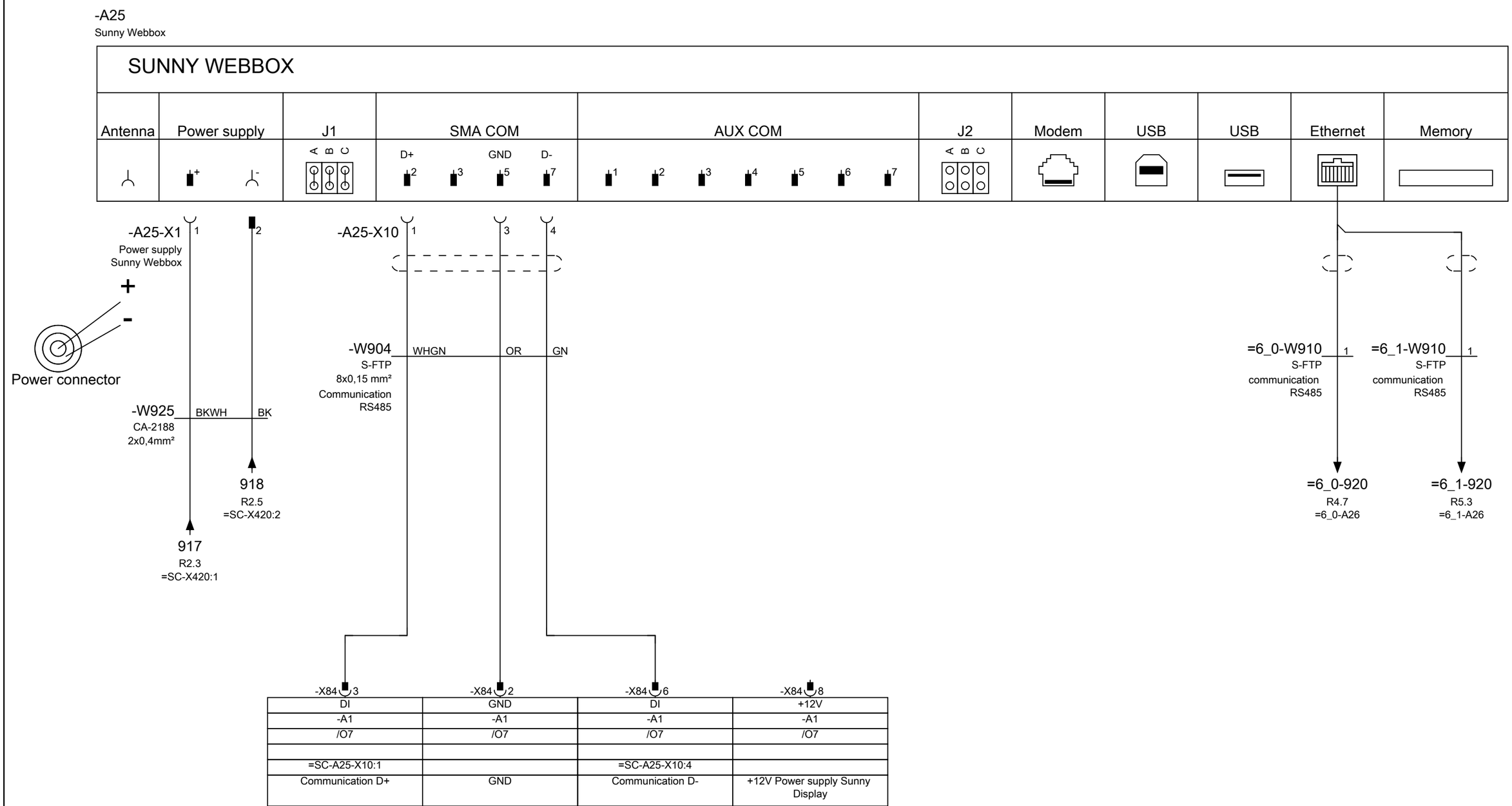

-X84 3	-X84 2	-X84 6	-X84 8
DI	GND	DI	+12V
-A1	-A1	-A1	-A1
/O7	/O7	/O7	/O7
=SC-A25-X10:1		=SC-A25-X10:4	
Communication D+	GND	Communication D-	+12V Power supply Sunny Display

Standard
Option 6_0
Option 6_1

			Date	07.04.2011	Sunny Central 720-CP-10	SMA	SMA Solar Technology AG D-34266 Niestetal +49 (0)561 - 9522 - 0	Communication Sunny Webbox	SC-720-CP-10:A	SC-720-CP-10 &EFS R3
			Author	R.Branz						
			Checked	J.Bader						
Modification	Date	Name	Origin		Replacement of	Replaced by			SC-720-CP-10-CEN110910	

1	2	3	4	5	6	7	8	9	10

=6_0

-A26-X1 = Voltage supply Routing Switch
-A27-X1 = Voltage supply Display

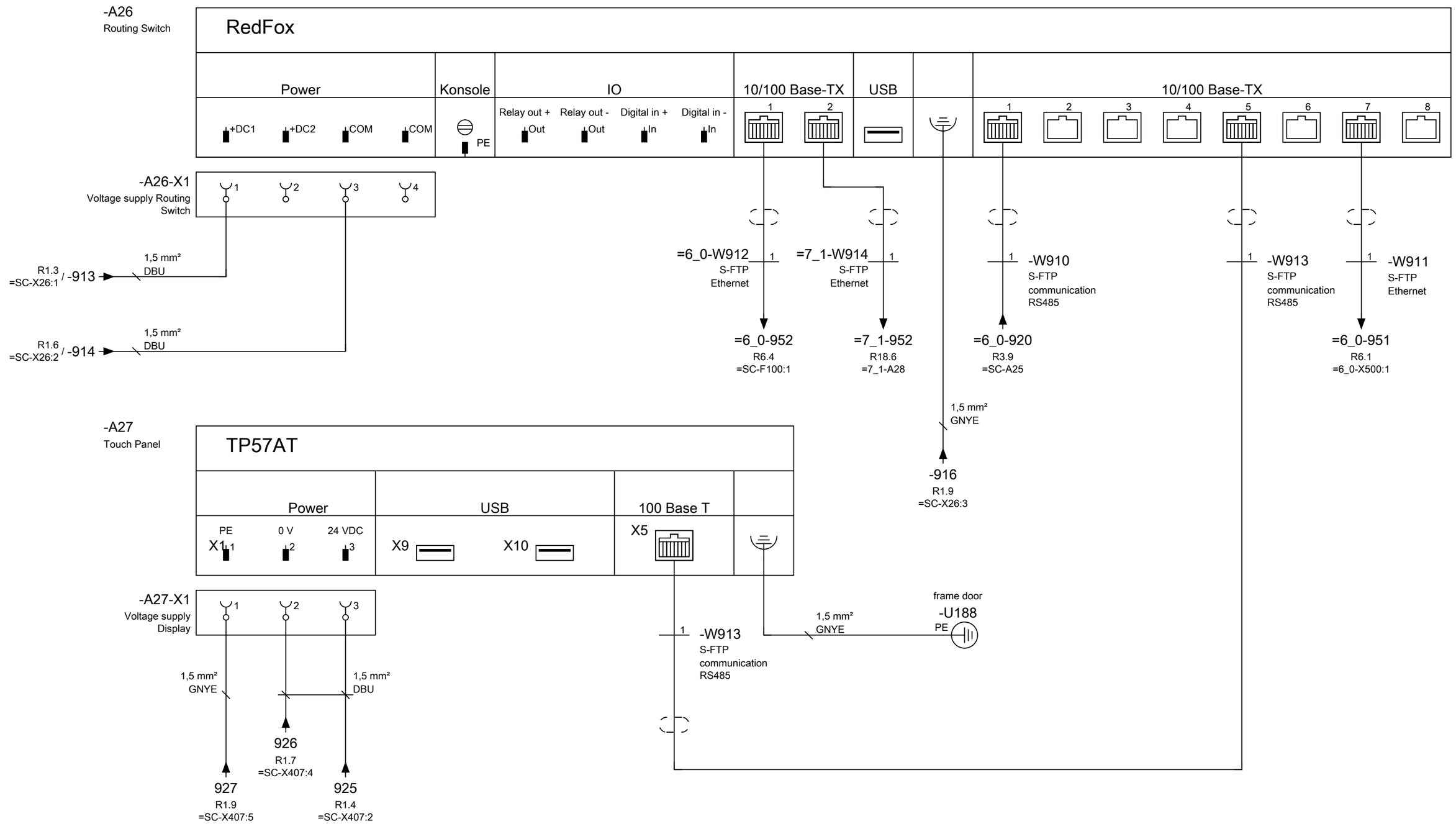

Option 6_0
Option 7_0
Option 7_1

			Date	07.04.2011	Sunny Central 720-CP-10	SMA Solar Technology AG D-34266 Niestetal +49 (0)561 - 9522 - 0	Communication 6_0 Display	SC-720-CP-10:A	SC-720-CP-10	&EFS
			Author	R.Branz						R4
			Checked	J.Bader						
Modification	Date	Name	Origin		Replacement of	Replaced by			SC-720-CP-10-CEN110910	

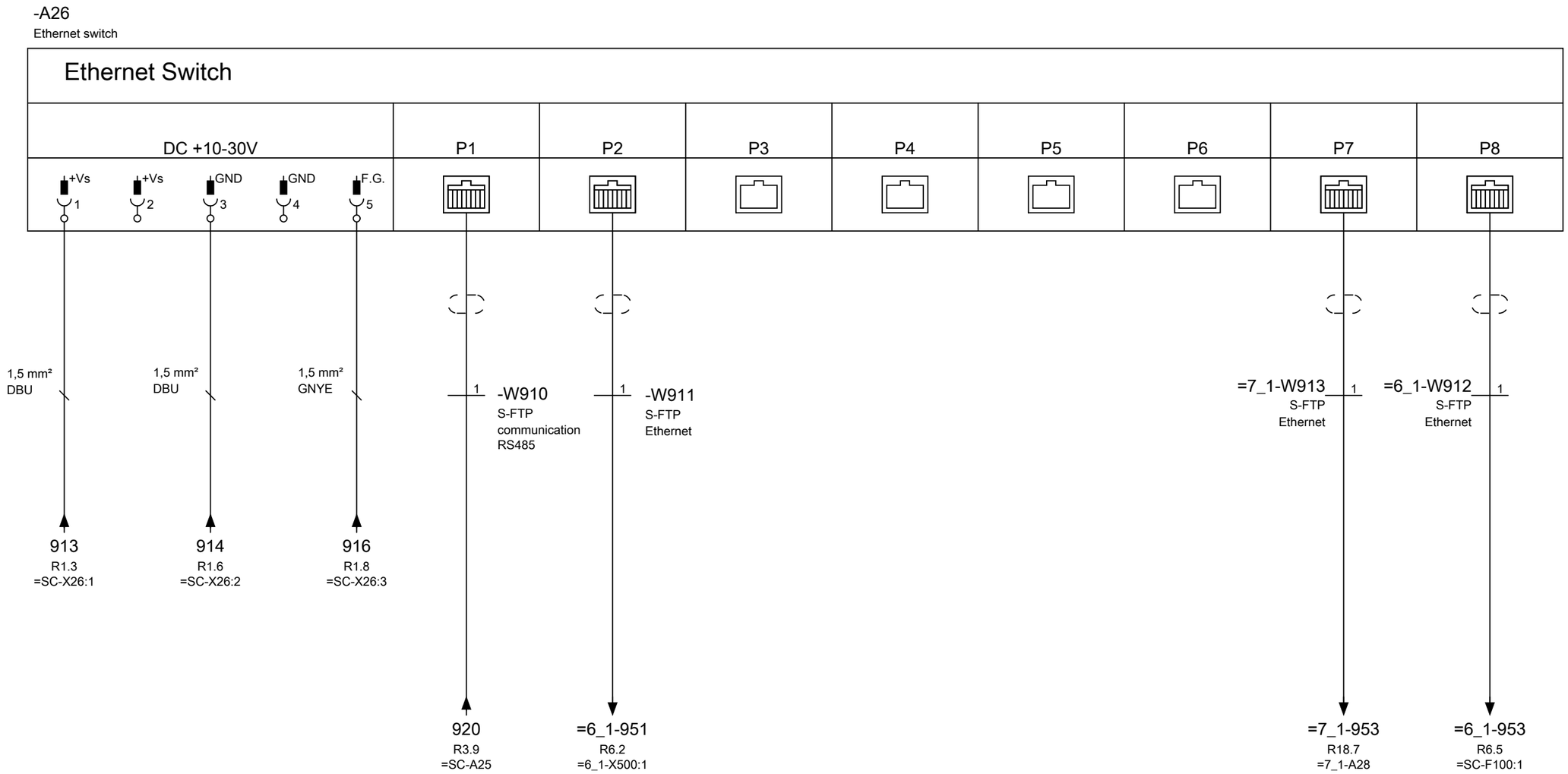

Option 6_1
Option 7_0
Option 7_1

			Date	07.04.2011	Sunny Central 720-CP-10	SMA	SMA Solar Technology AG D-34266 Niestetal +49 (0)561 - 9522 - 0	Communication 6_1 Ethernet Switch	SC-720-CP-10:A	SC-720-CP-10 &EFS R5
			Author	R.Branz						
			Checked	J.Bader						
Modification	Date	Name	Origin		Replacement of	Replaced by			SC-720-CP-10-CEN110910	

1	2	3	4	5	6	7	8	9	10

=SC

=6_0-X500 = interface Service =6_1-X500 = interface Service

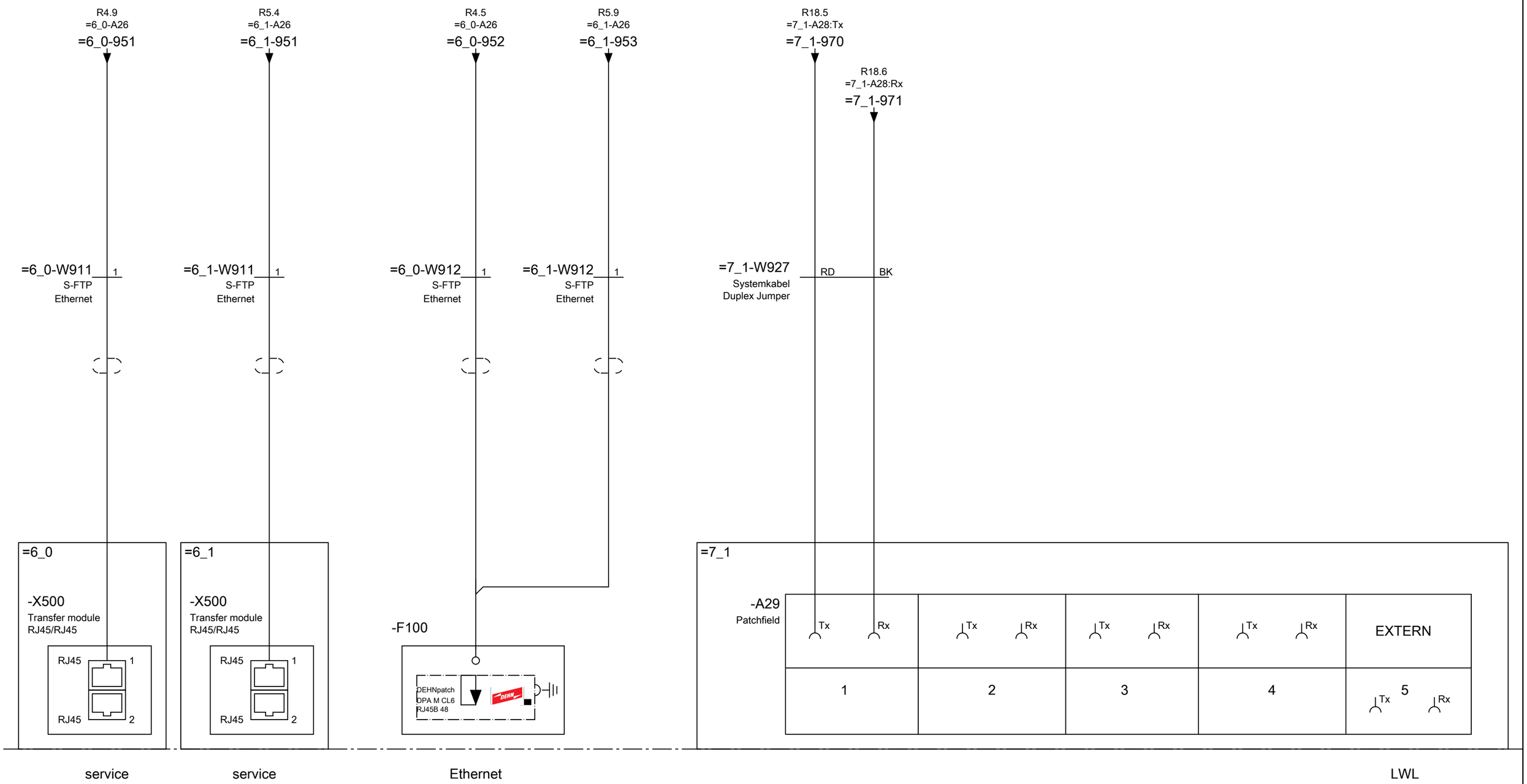

Standard
Option 7_0
Option 7_1

			Date	07.04.2011	Sunny Central 720-CP-10	SMA Solar Technology AG D-34266 Niestetal +49 (0)561 - 9522 - 0	Communication Customer's connection	SC-720-CP-10:A	SC-720-CP-10	&EFS
			Author	R.Branz						R6
			Checked	J.Bader						
Modification	Date	Name	Origin		Replacement of	Replaced by			SC-720-CP-10-CEN110910	

1	2	3	4	5	6	7	8	9	10

=SC

=11_0-X101 = Termination plug X984

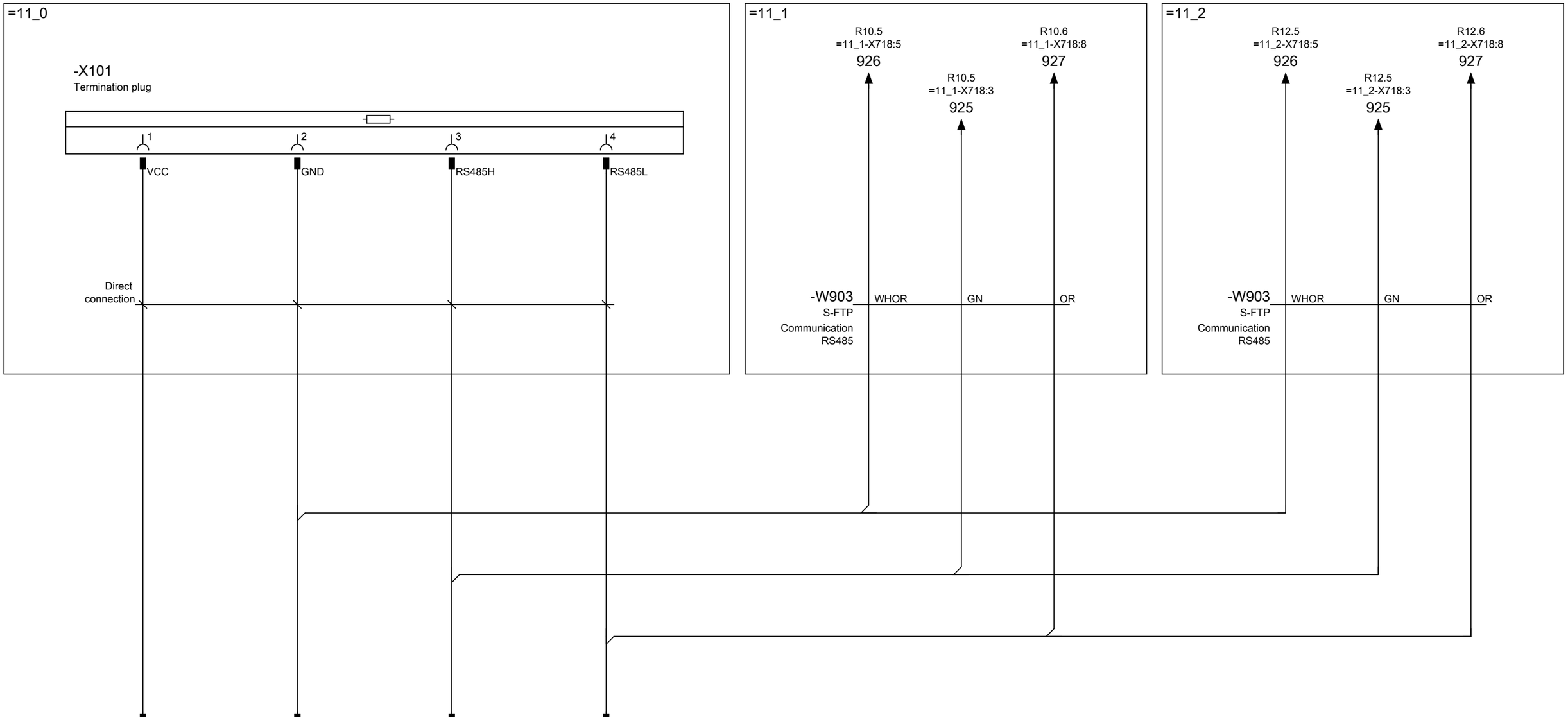

-X85 8	-X85 2	-X85 3	-X85 4
+12V	GND	DI	DI
-A1	-A1	-A1	-A1
/O7	/O7	/O7	/O7
		:RS485H	:RS485L
+12V Power supply Sunny Display	GND	Communication D+	Communication D-

Option 11_0
Option 11_1
Option 11_2

			Date	07.04.2011	Sunny Central 720-CP-10	SMA	SMA Solar Technology AG D-34266 Niestetal +49 (0)561 - 9522 - 0	Communication Sunny Webbox	SC-720-CP-10:A	SC-720-CP-10 &EFS
			Author	R.Branz						R7
			Checked	J.Bader						
Modification	Date	Name	Origin		Replacement of	Replaced by				SC-720-CP-10-CEN110910

1	2	3	4	5	6	7	8	9	10

=SC

-X300 = control HUB

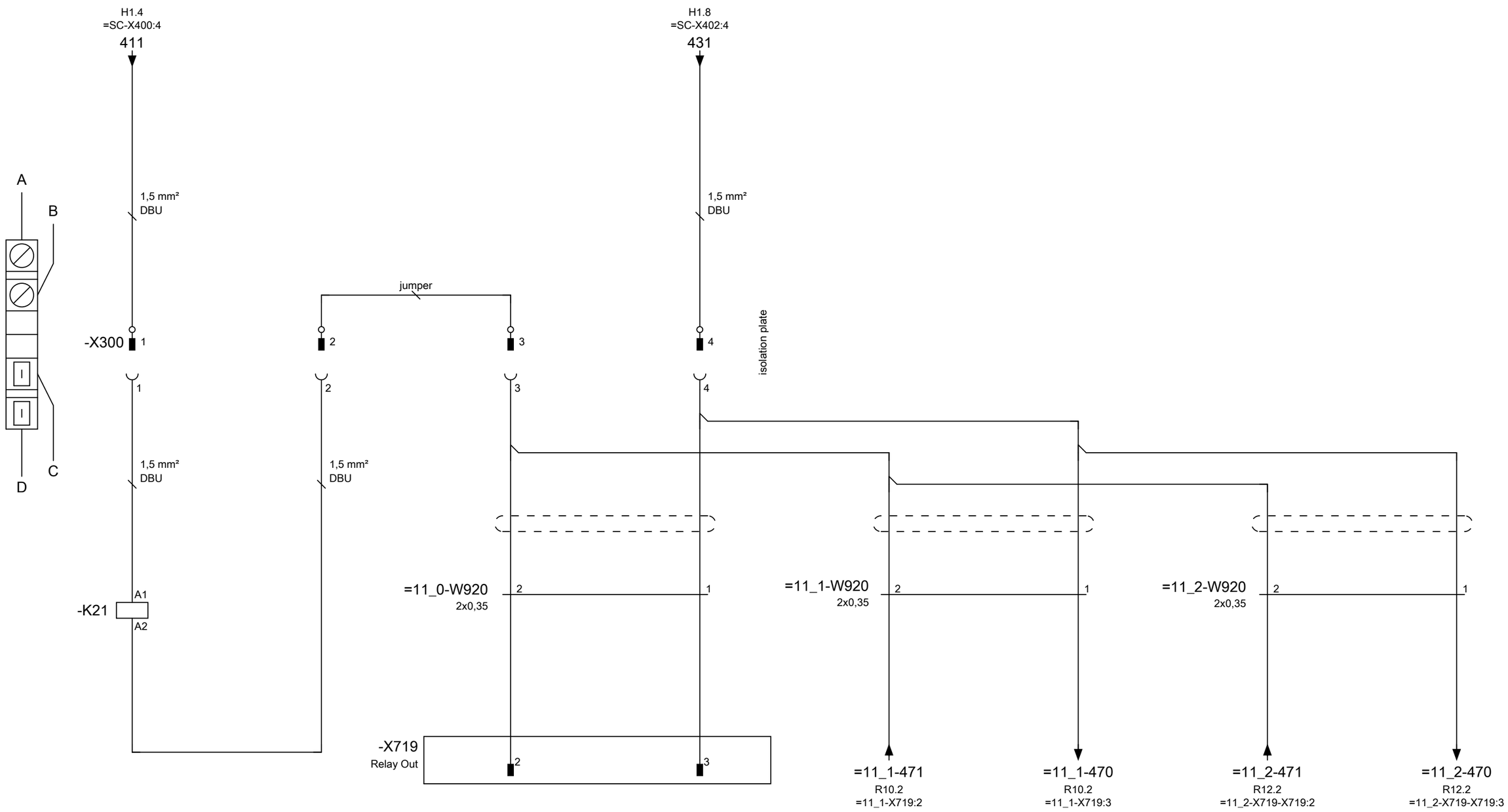

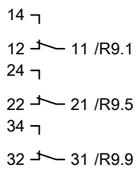

Notice :
Relay K21 is only mounted at Option 11_ 1 and 11_2!
Cabel SC-W920 is only conected on terminal SC-X300 at Option 11_1 or 11_2!

Standard
Option 11_0
Option 11_1
Option 11_2

			Date	07.04.2011	Sunny Central 720-CP-10	SMA	SMA Solar Technology AG D-34266 Niestetal +49 (0)561 - 9522 - 0	String current monitoring	SC-720-CP-10:A	SC-720-CP-10 &EFS
			Author	R.Branz						R8
			Checked	J.Bader						
Modification	Date	Name	Origin		Replacement of	Replaced by			SC-720-CP-10-CEN110910	

1	2	3	4	5	6	7	8	9	10
=SC	-X301 = control HUB1			-X302 = control HUB2				-X303 = control HUB3	

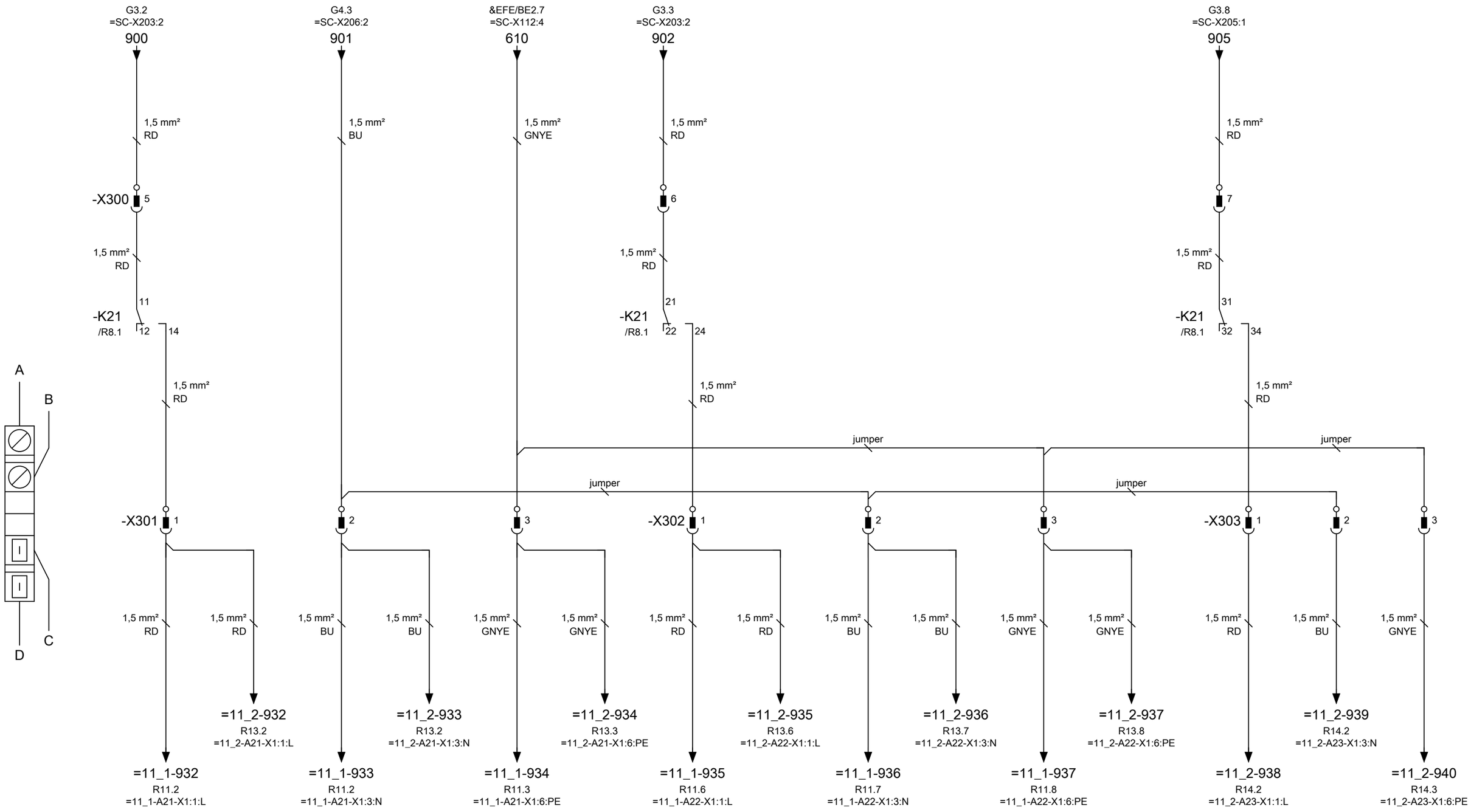

Standard
Option 11_1
Option 11_2

			Date	07.04.2011	Sunny Central 720-CP-10	SMA Solar Technology AG D-34266 Niestetal +49 (0)561 - 9522 - 0	String current monitoring Power supply Hub	SC-720-CP-10:A	SC-720-CP-10 &EFS R9	
			Author	R.Branz						
			Checked	J.Bader						
Modification	Date	Name	Origin		Replacement of	Replaced by			SC-720-CP-10-CEN110910	

1	2	3	4	5	6	7	8	9	10
=11_1	-X718 = SCSMC COM 2					=11_1-X717 = SCSMC COM 1			

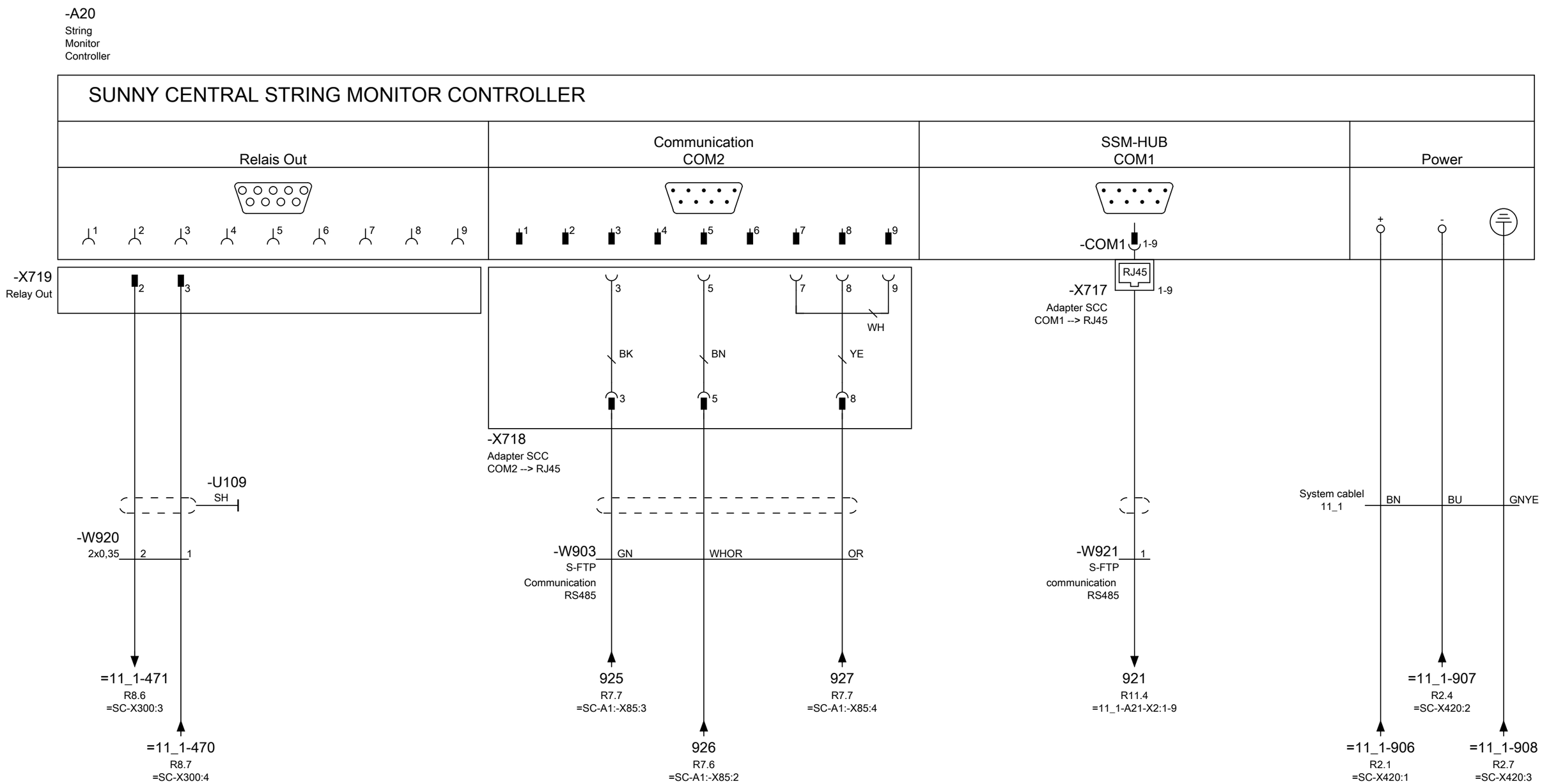

Option 11_1

			Date	07.04.2011	Sunny Central 720-CP-10	SMA Solar Technology AG D-34266 Niestetal +49 (0)561 - 9522 - 0	Communication Sunny Central String Monitor Controller	SC-720-CP-10:A	SC-720-CP-10	&EFS
			Author	R.Branz						R10
			Checked	J.Bader					SC-720-CP-10-CEN110910	
Modification	Date	Name	Origin		Replacement of	Replaced by				

1	2	3	4	5	6	7	8	9	10
=11_1	Power supply				Power supply				-X100 = Termination plug HUB A22
	SMU-distribution box SMU8-HUB1				SMU-distribution box SMU8-HUB2				

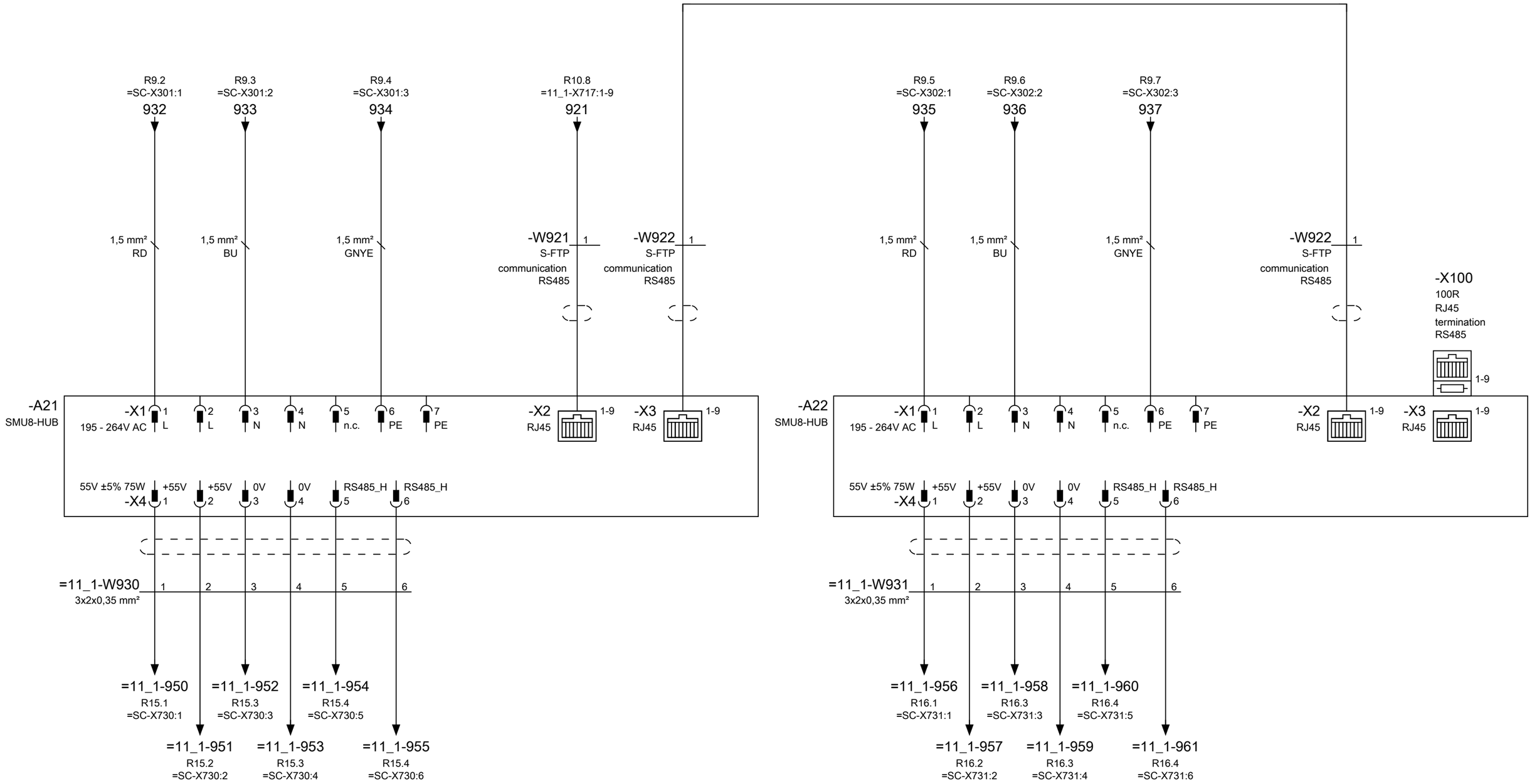

Option 11_1

			Date	07.04.2011	Sunny Central 720-CP-10	SMA Solar Technology AG D-34266 Niestetal +49 (0)561 - 9522 - 0	SMU-distribution box SMU8-HUB1	SC-720-CP-10:A	SC-720-CP-10 &EFS
			Author	R.Branz					R11
			Checked	J.Bader					
Modification	Date	Name	Origin		Replacement of	Replaced by		SC-720-CP-10-CEN110910	

1	2	3	4	5	6	7	8	9	10

=11_2

=11_2-X718 = SCSMC COM 2

=11_2-X717 = SCSMC COM 1

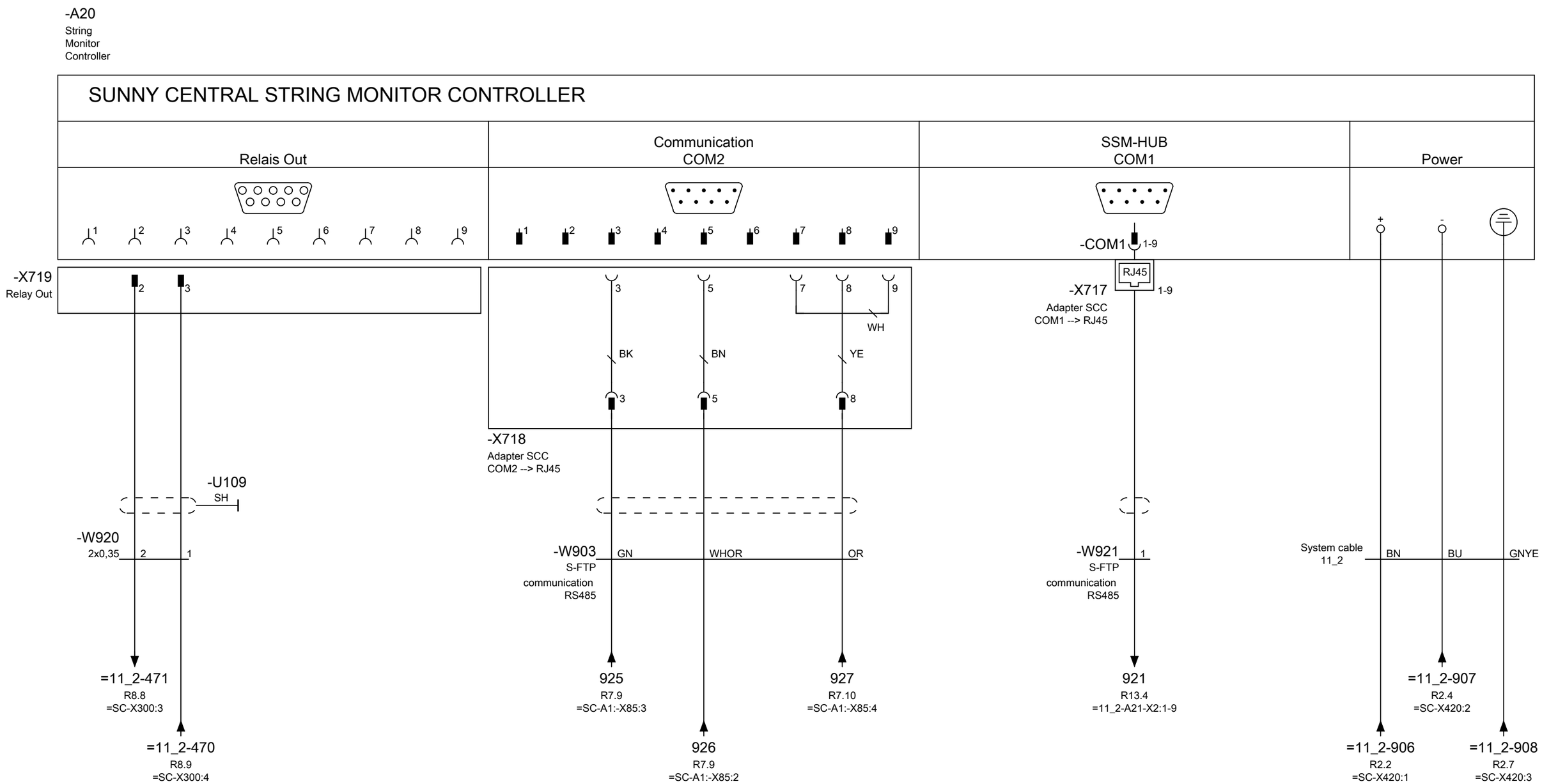

Option 11_2

			Date	07.04.2011	Sunny Central 720-CP-10	SMA	SMA Solar Technology AG D-34266 Niestetal +49 (0)561 - 9522 - 0	Communication Sunny Central String Monitor Controller	SC-720-CP-10:A	SC-720-CP-10 &EFS R12
			Author	R.Branz						
			Checked	J.Bader						SC-720-CP-10-CEN110910
Modification	Date	Name	Origin		Replacement of	Replaced by				

1	2	3	4	5	6	7	8	9	10

=11_2

Power supply
SMU-distribution box SMU8-HUB1

Power supply
SMU-distribution box SMU8-HUB2

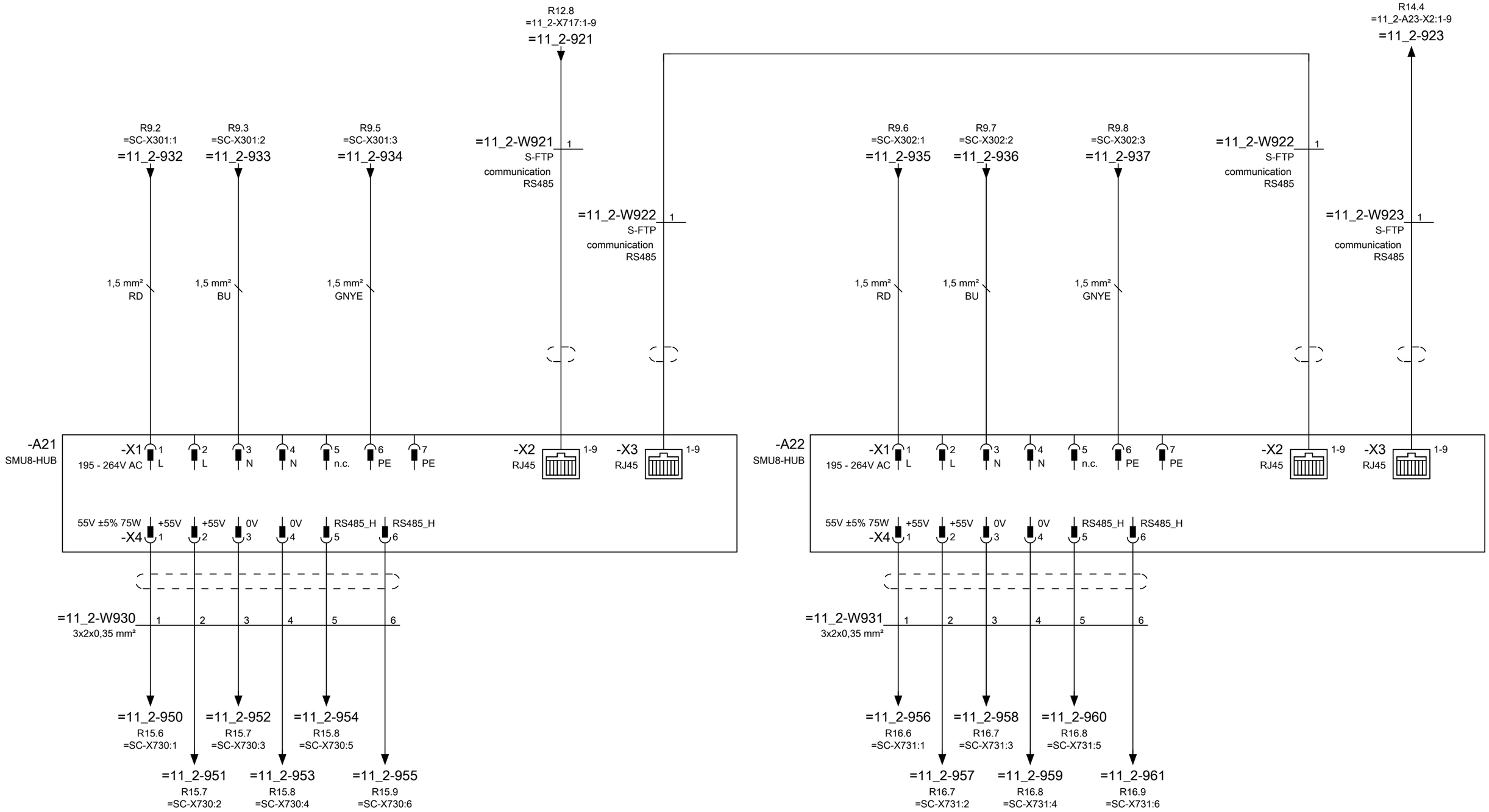

Option 11_2

			Date	07.04.2011	Sunny Central 720-CP-10	SMA	SMA Solar Technology AG D-34266 Niestetal +49 (0)561 - 9522 - 0	SMU-distribution box SMU8-HUB1	SC-720-CP-10:A	SC-720-CP-10 &EFS
			Author	R.Branz						R13
			Checked	J.Bader						
Modification	Date	Name	Origin		Replacement of	Replaced by			SC-720-CP-10-CEN110910	

1	2	3	4	5	6	7	8	9	10

=11_2

Power supply
SMU-distribution box SMU8-HUB1

-X100 = Termination plug HUB A23

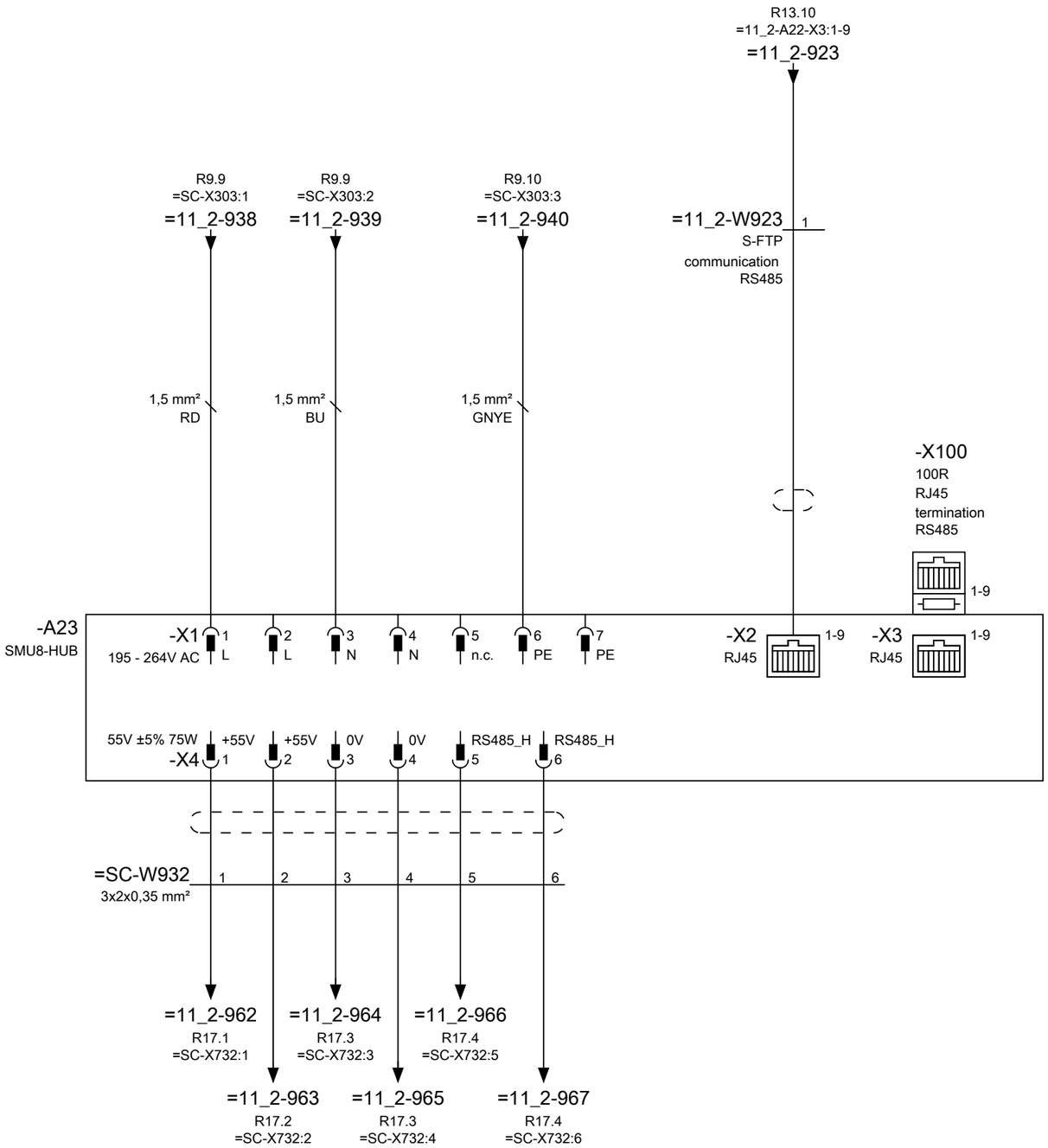

Option 11_2

			Date	07.04.2011	Sunny Central 720-CP-10	SMA Solar Technology AG D-34266 Niestetal +49 (0)561 - 9522 - 0	SMU-distribution box SMU8-HUB1	SC-720-CP-10:A	SC-720-CP-10	&EFS
			Author	R.Branz						R14
			Checked	J.Bader						
Modification	Date	Name	Origin		Replacement of	Replaced by			SC-720-CP-10-CEN110910	

1	2	3	4	5	6	7	8	9	10

=SC

-X730 = SMU8HUB 1

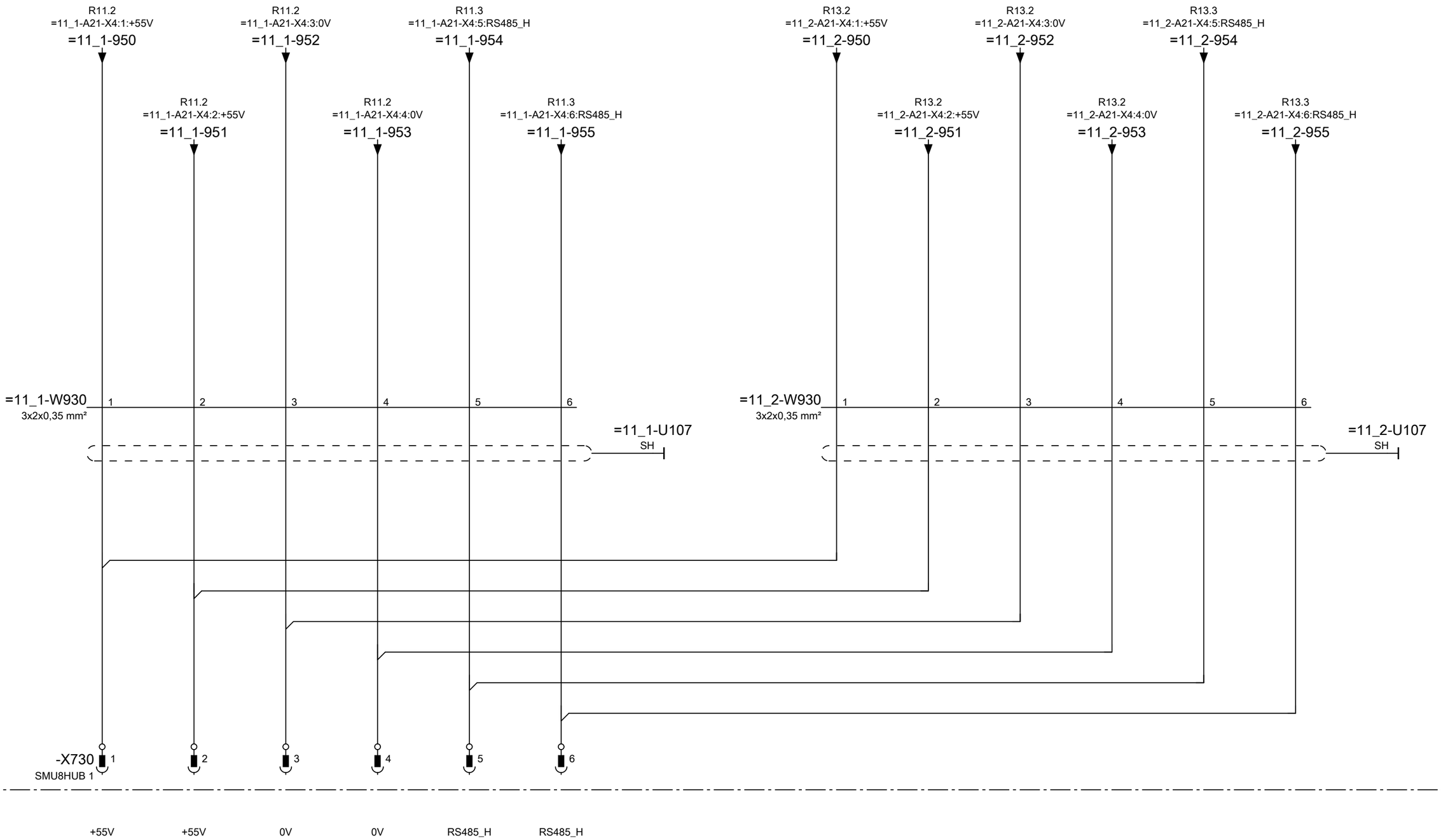

Standard
Option 11_1
Option 11_2

			Date	07.04.2011	Sunny Central 720-CP-10	SMA	SMA Solar Technology AG D-34266 Niestetal +49 (0)561 - 9522 - 0	String current monitoring External	SC-720-CP-10:A	SC-720-CP-10	&EFS
			Author	R.Branz							R15
			Checked	J.Bader							
Modification	Date	Name	Origin		Replacement of	Replaced by				SC-720-CP-10-CEN110910	

1	2	3	4	5	6	7	8	9	10

=SC

-X731 = SMU8HUB 2

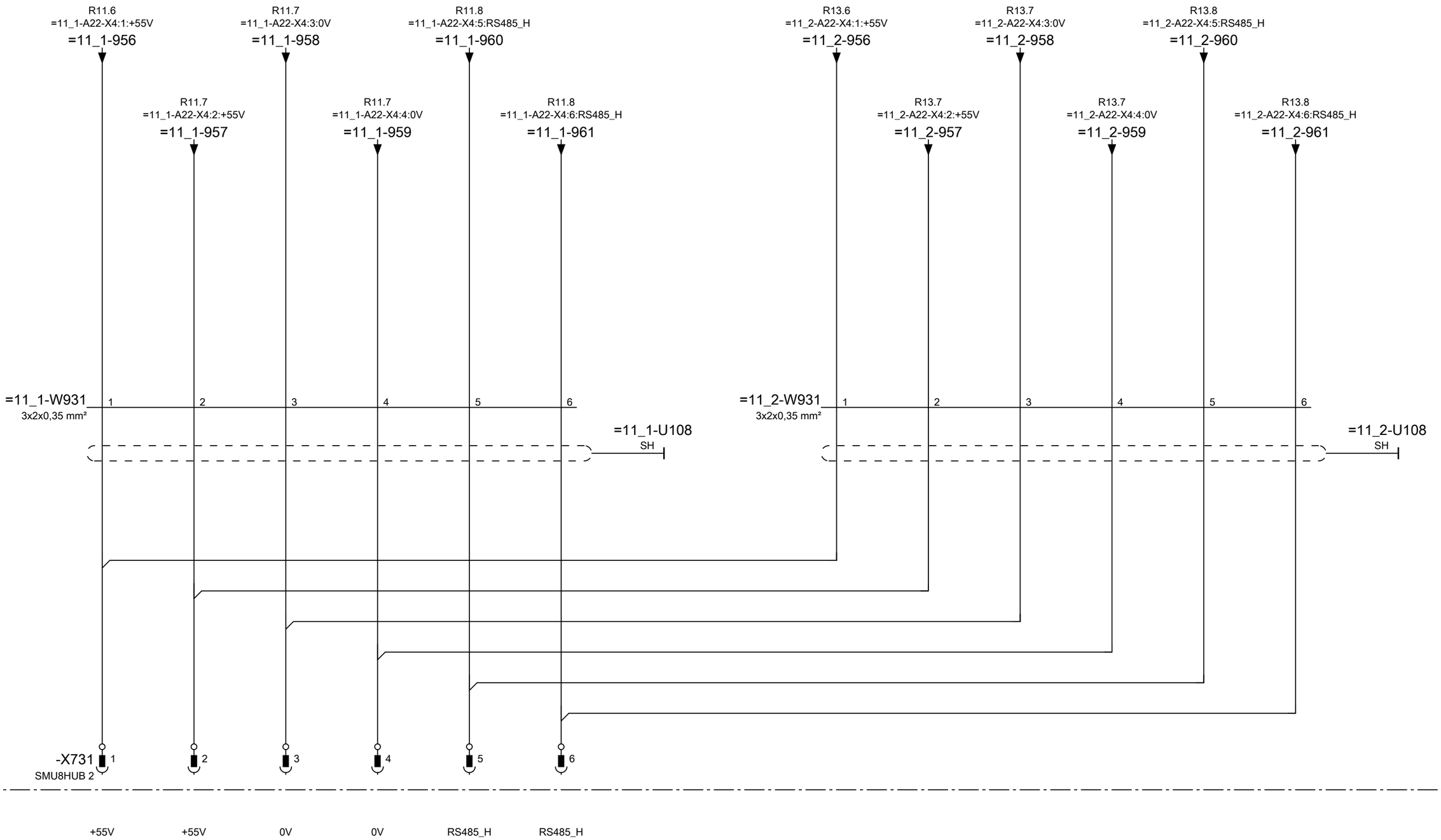

Standard
Option 11_1
Option 11_2

			Date	07.04.2011	Sunny Central 720-CP-10	SMA	SMA Solar Technology AG D-34266 Niestetal +49 (0)561 - 9522 - 0	String current monitoring External	SC-720-CP-10:A	SC-720-CP-10	&EFS
			Author	R.Branz							R16
			Checked	J.Bader						SC-720-CP-10-CEN110910	
Modification	Date	Name	Origin		Replacement of	Replaced by					

1	2	3	4	5	6	7	8	9	10

=SC

-X732 = SMU8HUB 3

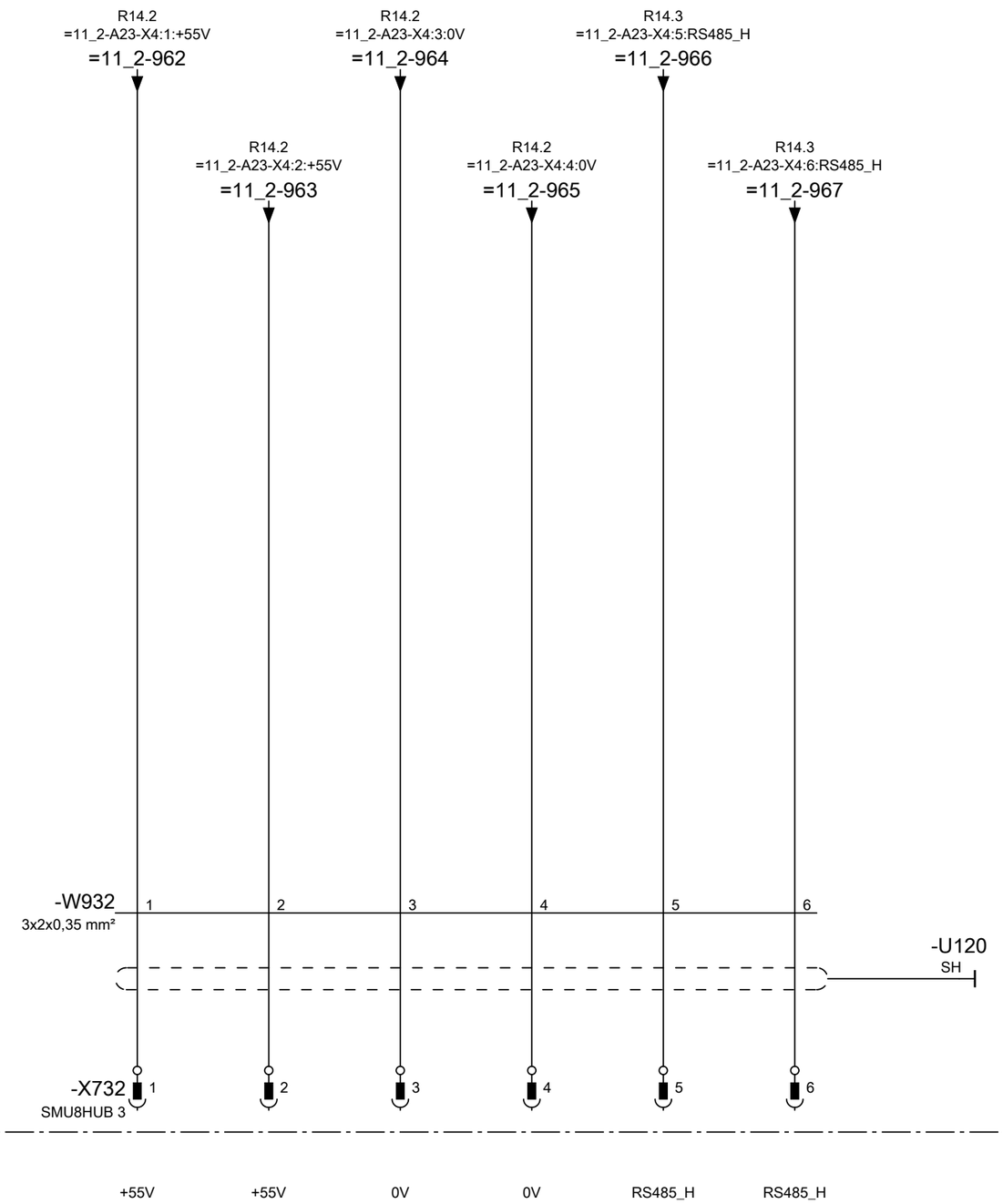

Standard

			Date	07.04.2011	Sunny Central 720-CP-10	SMA Solar Technology AG D-34266 Niestetal +49 (0)561 - 9522 - 0	String current monitoring External	SC-720-CP-10:A	SC-720-CP-10 &EFS
			Author	R.Branz					R17
			Checked	J.Bader					
Modification	Date	Name	Origin		Replacement of	Replaced by		SC-720-CP-10-CEN110910	

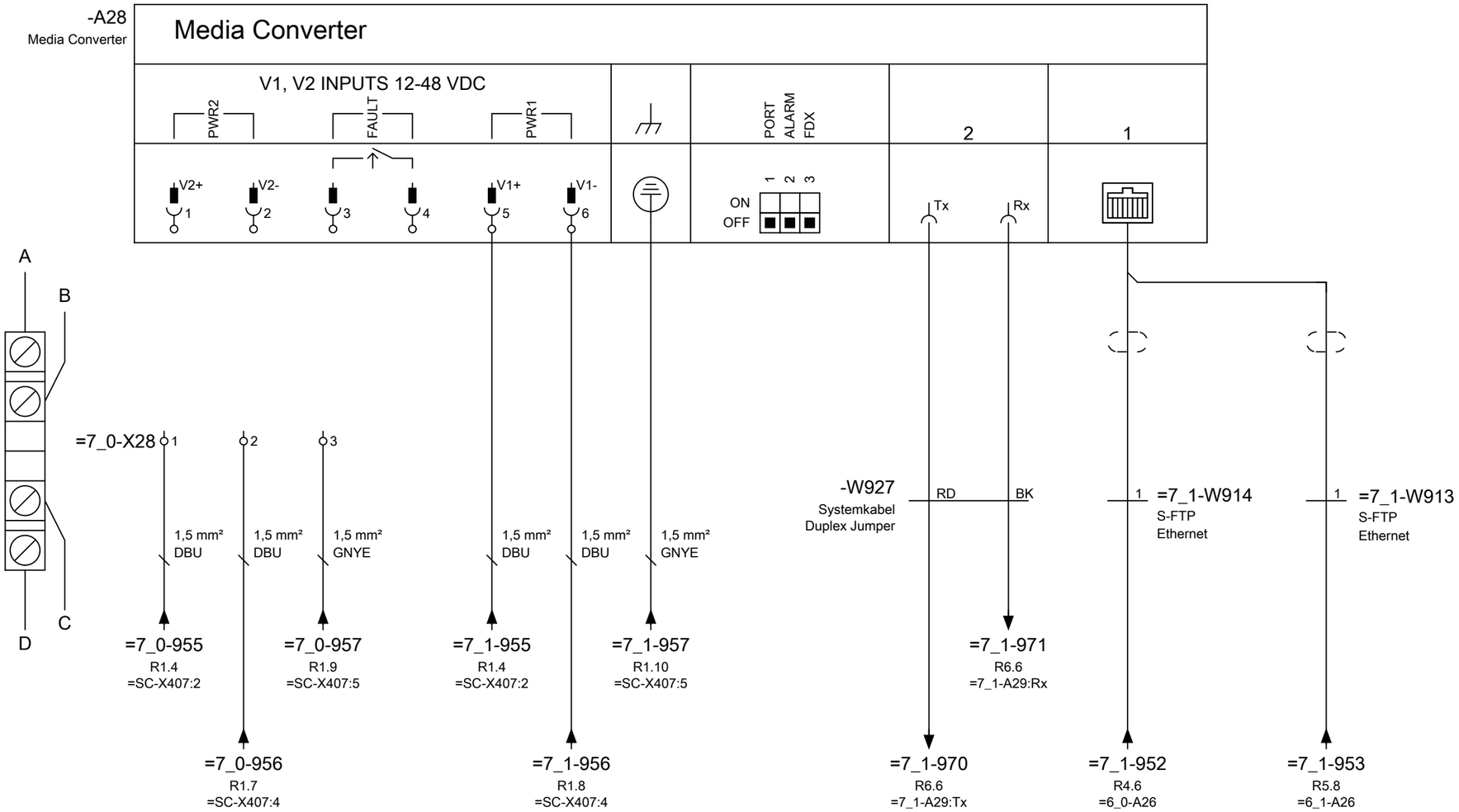

Notice:
Terminal =7_0-X28 is not used at Option 7_1

Option 7_0
Option 7_1

Terminal-strip overview

Reference attributes	Function	Supplementary field	Terminals	Terminal diagram page
=2_4-X19	DC Power supply Plus Busbar	Customer interface	2	
=2_4-X29	DC Power supply Minus Busbar	Customer interface	2	
=2_X-X10	DC Power supply Plus	Customer interface	1	
=2_X-X11	DC Power supply Plus	Customer interface	1	
=2_X-X12	DC Power supply Plus	Customer interface	1	
=2_X-X13	DC Power supply Plus	Customer interface	1	
=2_X-X14	DC Power supply Plus	Customer interface	1	
=2_X-X15	DC Power supply Plus	Customer interface	1	
=2_X-X16	DC Power supply Plus	Customer interface	1	
=2_X-X17	DC Power supply Plus	Customer interface	1	
=2_X-X18	DC Power supply Plus	Customer interface	1	
=2_X-X20	DC Power supply Minus	Customer interface	1	
=2_X-X21	DC Power supply Minus	Customer interface	1	
=2_X-X22	DC Power supply Minus	Customer interface	1	
=2_X-X23	DC Power supply Minus	Customer interface	1	
=2_X-X24	DC Power supply Minus	Customer interface	1	
=2_X-X25	DC Power supply Minus	Customer interface	1	
=2_X-X26	DC Power supply Minus	Customer interface	1	
=2_X-X27	DC Power supply Minus	Customer interface	1	
=2_X-X28	DC Power supply Minus	Customer interface	1	
=SC-X1	Grid feeding L1	Customer interface	3	
=SC-X2	Grid feeding L2	Customer interface	3	
=SC-X3	Grid feeding L3	Customer interface	3	
=SC-X110	power supply PE	Customer interface	12	

Terminal-strip overview

Reference attributes	Function	Supplementary field	Terminals	Terminal diagram page
=4_0-X30	Grounding Option 4_0	Internal	1	
=4_5-X450	Softgrounding	Internal	1	
=4_6-X450	Softgrounding	Internal	1	
=5_0-X10	Insulation monitoring Option 10_0	Internal	14	
=5_0-X470	PV-Voltage Coupling device	Internal	2	
=6_0-A26-X1	Voltage supply Routing Switch	Internal	4	
=6_0-A27-X1	Voltage supply Display	Internal	3	
=7_0-X28	Power supply LWL Converter	Internal	3	
=10_3-X40	AC-Main switch Option 10_3	Internal	2	
=SC-X26	Voltage supply Communication	Internal	3	
=SC-X200	Control voltage 21L1	Internal	2	
=SC-X201	Control voltage 21L2	Internal	2	
=SC-X202	Control voltage 21L3	Internal	2	
=SC-X203	Control voltage 22L1	Internal	2	
=SC-X204	Control voltage 22L2	Internal	2	
=SC-X205	Control voltage 22L3	Internal	2	
=SC-X206	Control voltage 21N	Internal	4	
=SC-X214	disconnect terminal	Internal	6	
=SC-X400	Control voltage 41L+	Internal	4	
=SC-X402	Control voltage 41L-	Internal	4	
=SC-X407	Control voltage 42L+ , 42L-	Internal	5	
=SC-X451	Softgrounding voltage relay	Internal	5	
=SC-X460	Reset Softgrounding	Internal	1	
=SC-X701	control GFDI	Internal	4	
=SC-X720	Temperature sensor Control Cabinet	Internal	2	
=SC-X721	Temperature sensor Power Cabinet	Internal	2	
=SC-X722	Temperature sensor ambient temperature	Internal	2	
=SC-X726	Triggering Relay=14_4-K26	Internal	1	

Connector overview

Plug designation	Function	Supplementary field	Contacts	Page of plug diagram
=6_0-X500	interface Service	Customer interface	2	
=6_1-X500	interface Service	Customer interface	2	
=14_4-X760	Immediate-Stopp External	Customer interface	2	
=SC-X210	Control voltage External	Customer interface	5	
=SC-X420	Power supply SCSMC , WEBBOX	Customer interface	3	
=SC-X430	Temperature Sensor Sine filter	Customer interface	2	
=SC-X725	External Predefined setpoint Reactive power , Effective power	Customer interface	4	
=SC-X730	SMU8HUB 1	Customer interface	6	
=SC-X731	SMU8HUB 2	Customer interface	6	
=SC-X732	SMU8HUB 3	Customer interface	6	
=SC-X750	Remote Deactivation Unit Start/Stop External	Customer interface	2	
=SC-X751	Input Protection transformer	Customer interface	2	
=SC-X752	Warning Insulation monitoring External	Customer interface	3	

Connector overview

Plug designation	Function	Supplementary field	Contacts	Page of plug diagram
=SC-X73	application coding A2-X71	Intern	0	
=SC-X80	SC20APP-72DE	Intern	0	
=SC-X81	SC20CAN-AD2	Intern	0	

Connector overview

Plug designation	Function	Supplementary field	Contacts	Page of plug diagram
=4_2-F2-X1	motor drive GFDI	Internal	10	
=4_2-X411	Control voltage External	Internal	0	
=4_4-F2-X1	motor drive GFDI	Internal	10	
=4_4-X411	Control voltage External	Internal	0	
=11_0-X101	Termination plug X984	Internal	0	
=11_1-X100	Termination plug HUB A22	Internal	1	
=11_1-X717	SCSMC COM 1	Internal	1	
=11_1-X718	SCSMC COM 2	Internal	3	
=11_2-X100	Termination plug HUB A23	Internal	1	
=11_2-X717	SCSMC COM 1	Internal	1	
=11_2-X718	SCSMC COM 2	Internal	3	
=SC-X52	Power supply Fan	Internal	3	
=SC-X300	control HUB	Internal	3	
=SC-X301	control HUB1	Internal	3	
=SC-X302	control HUB2	Internal	3	
=SC-X303	control HUB3	Internal	3	
=SC-X410	Control voltage External	Internal	0	
=SC-X600	interface Service 230V	Internal	3	

Connector overview

Plug designation	Function	Supplementary field	Contacts	Page of plug diagram
=SC-X710	transfer plug Inverter Cabinet	Transport disconnecting point	4	
=SC-X711	transfer plug Inverter Cabinet	Transport disconnecting point	3	
=SC-X712	transfer plug Inverter Cabinet	Transport disconnecting point	4	

Device tag list

Reference attributes	Placement	Quantity	Designation	Part number
=SC-A1	&EFS/M20.3	1	Assembly	SC20CONT.GR-S1
=SC-A2	&EFS/M19.1	1	Assembly	SC20CAIO.GR1
=SC-A10	&EFS/D7.1	1	Assembly	SC20AC.BG0K60V
=SC-A11	&EFS/D7.8	1	Assembly	SC20AC.BG0K60V
=SC-A12	&EFS/D8.3	1	Assembly	SC20AC.BG0K60V
=SC-A15	&EFS/E16.2	1	Assembly	SC20DC.BG1K20V
=SC-A16	&EFS/E16.6	1	Assembly	SC20DC.BG1K20V
=SC-A17	&EFS/E15.5	1	Assembly	SC-EMV-01
=SC-A25	&EFS/R3.1	1	Sunny WebBox	SUNNYWEBBOX.GR1
=SC-B2	&EFS/M15.5	1	Temperature controller	09-6075
=SC-B3	&EFS/M9.5	1	Temperature controller	09-6075
=SC-B11	&EFS/M7.4	1	Hygrostat	65-0507
=SC-B20	&EFS/M28.8	1	Temperature sensor	09-02050
=SC-B21	&EFS/M28.4	1	Temperature sensor	09-02050
=SC-B22	&EFS/M28.2	1	Temperature sensor	09-02050
=SC-C1	&EFS/D6.10	1	Capacitor	02-911002
=SC-C2	&EFS/D6.10	1	Capacitor	02-911002
=SC-C4	&EFS/E15.1	1	Capacitor	02-9780
=SC-C5	&EFS/E15.10	1	Capacitor	02-9780
=SC-E10	&EFS/M4.9	1	Resistor	01-8319231
=SC-E100	&EFS/M5.2	1	Fan	46-5185
=SC-E101	&EFS/M5.6	1	Fan	46-5185
=SC-F5	&EFS/D7.5	1	Circuit breaker B6A	61-117306
=SC-F20	&EFS/D4.1	1	Discharger	10-6404
=SC-F21	&EFS/D4.3	1	Discharger	10-6404
=SC-F22	&EFS/D4.4	1	Discharger	10-6404
=SC-F23	&EFS/E23.1	1	Discharger	10-6405

Device tag list

Reference attributes	Placement	Quantity	Designation	Part number
=SC-F24	&EFS/E23.3	1	Discharger	10-6405
=SC-F29	&EFS/G1.6	1	Combination protector	62-951315
=SC-F100	&EFS/R6.3	1	Surge suppressor	62-99642
=SC-F119	&EFS/G1.2	1	Circuit breaker K16A	61-1263161
=SC-G11	&EFS/M6.2	1	Fan	46-5070
=SC-K20	&EFS/M4.2	1	Contactor	60-003030
=SC-K21	&EFS/R8.1	1	Relay	60-1504
=SC-K21	&EFS/R8.1	1	Relay socket	60-15101
=SC-K22	&EFS/M22.9	1	Relay	60-154060
=SC-K25	&EFS/M29.8	1	Relay	60-154072
=SC-K25	&EFS/M29.8	1	Insulating plate	60-154810
=SC-Q1	&EFS/M1.3	1	Contactor	60-000390
=SC-Q1	&EFS/M1.3	1	Auxiliary contact	60-0091632
=SC-Q5	&EFS/E14.1	1	Switch-disconnector	60-9045
=SC-R1	&EFS/D6.1	1	Reactor	04-035505
=SC-R50	&EFS/G1.2	1	EMC-filter	64-01201
=SC-R51	&EFS/M28.7	1	Resistor	01-0321
=SC-S1	&EFS/M7.8	1	Key switch	20-0830
=SC-S1	&EFS/M7.8	1	Contact	20-1410
=SC-T6	&EFS/E15.4	1	Current transformer	60-80012
=SC-T10	&EFS/H1.2	1	Power supply	30-94074
=SC-T11	&EFS/E1.1	1	Inverter bridge	64-114820
=SC-T12	&EFS/D5.3	1	Current transformer	04-0215004
=SC-T13	&EFS/D5.6	1	Current transformer	04-0215004
=SC-T14	&EFS/D5.9	1	Current transformer	04-0215004
=SC-T20	&EFS/H1.2	1	Buffer module	30-90380
=SC-T21	&EFS/R1.2	1	Power supply	30-90111

Device tag list

Reference attributes	Placement	Quantity	Designation	Part number
=SC-X52	&EFS/M5.2	2	2-conductor/2-pin receptacle terminal 4 mm²	62-769171
=SC-X52	&EFS/M5.2	1	Terminal	62-769217
=SC-X52	&EFS/M5.2	1	End plate	62-769304
=SC-X52	&EFS/M5.2	1	Group label holder	62-249120
=SC-X52	&EFS/M5.2	2	End clamp 6mm	62-2993
=SC-X52	&EFS/M5.2	1	1-pole	62-769101022016
=SC-X52	&EFS/M5.2	1	Multipoint connector	62-769102022
=SC-X52	&EFS/M5.2	1	3-pole	62-769103
=SC-X52	&EFS/M5.2	3	Labeling	62-5715
=SC-X72	&EFS/M19.1	1	Connector	42-5101
=SC-X73	&EFS/M19.3	1	Connector	42-5101
=SC-X80	&EFS/M19.8	1	Application coding	SC20APP-72DE
=SC-X81	&EFS/M19.9	1	Plug-in connection	SC20CAN-AD2
=SC-X200	&EFS/G2.2	1	End clamp 6mm	62-2993
=SC-X200	&EFS/G2.2	2	4-conductor feed-through terminal, 2.5 mm²	62-280833
=SC-X200	&EFS/G2.2	1	Labeling	62-793502
=SC-X200	&EFS/G2.2	1	Group label holder	62-249120
=SC-X200	&EFS/G2.2	1	Crossbridge 2,5mm²	62-280402
=SC-X200	&EFS/G2.2	1	End plate	62-1507
=SC-X201	&EFS/G2.5	1	End clamp 6mm	62-2993
=SC-X201	&EFS/G2.5	2	4-conductor feed-through terminal, 2.5 mm²	62-280833
=SC-X201	&EFS/G2.5	1	Labeling	62-793502
=SC-X201	&EFS/G2.5	1	Group label holder	62-249120
=SC-X201	&EFS/G2.5	1	Crossbridge 2,5mm²	62-280402
=SC-X201	&EFS/G2.5	1	End plate	62-1507
=SC-X202	&EFS/G2.7	1	End clamp 6mm	62-2993
=SC-X202	&EFS/G2.7	2	4-conductor feed-through terminal, 2.5 mm²	62-280833

Device tag list

Reference attributes	Placement	Quantity	Designation	Part number
=SC-X202	&EFS/G2.7	1	Labeling	62-793502
=SC-X202	&EFS/G2.7	1	Group label holder	62-249120
=SC-X202	&EFS/G2.7	1	Crossbridge 2,5mm²	62-280402
=SC-X202	&EFS/G2.8	1	End plate	62-1507
=SC-X203	&EFS/G3.2	1	End clamp 6mm	62-2993
=SC-X203	&EFS/G3.2	2	4-conductor feed-through terminal, 2.5 mm²	62-280833
=SC-X203	&EFS/G3.2	1	Labeling	62-793502
=SC-X203	&EFS/G3.2	1	Group label holder	62-249120
=SC-X203	&EFS/G3.2	1	Crossbridge 2,5mm²	62-280402
=SC-X203	&EFS/G3.2	1	End plate	62-1507
=SC-X204	&EFS/G3.5	1	End clamp 6mm	62-2993
=SC-X204	&EFS/G3.5	2	4-conductor feed-through terminal, 2.5 mm²	62-280833
=SC-X204	&EFS/G3.5	1	Labeling	62-793502
=SC-X204	&EFS/G3.5	1	Group label holder	62-249120
=SC-X204	&EFS/G3.5	1	Crossbridge 2,5mm²	62-280402
=SC-X204	&EFS/G3.6	1	End plate	62-1507
=SC-X205	&EFS/G3.8	1	End clamp 6mm	62-2993
=SC-X205	&EFS/G3.8	2	4-conductor feed-through terminal, 2.5 mm²	62-280833
=SC-X205	&EFS/G3.8	1	Labeling	62-793502
=SC-X205	&EFS/G3.8	1	Group label holder	62-249120
=SC-X205	&EFS/G3.8	1	Crossbridge 2,5mm²	62-280402
=SC-X205	&EFS/G3.8	1	End plate	62-1507
=SC-X206	&EFS/G4.2	1	End clamp 6mm	62-2993
=SC-X206	&EFS/G4.2	4	4-conductor feed-through terminal, 2.5 mm²	62-280833
=SC-X206	&EFS/G4.2	1	Labeling	62-793502
=SC-X206	&EFS/G4.2	1	Group label holder	62-249120
=SC-X206	&EFS/G4.2	3	Crossbridge 2,5mm²	62-280402

Device tag list

Reference attributes	Placement	Quantity	Designation	Part number
=SC-X206	&EFS/G4.4	1	End plate	62-1507
=SC-X210	&EFS/G1.2	4	2-conductor/2-pin receptacle terminal 4 mm²	62-769171
=SC-X210	&EFS/G1.2	1	Multipoint connector	62-769104022
=SC-X210	&EFS/G1.2	1	1-pole	62-769101022016
=SC-X210	&EFS/G1.2	1	Terminal	62-769217
=SC-X210	&EFS/G1.2	1	End plate	62-769304
=SC-X210	&EFS/G1.2	2	Group label holder	62-249120
=SC-X210	&EFS/G1.2	2	End clamp 6mm	62-2993
=SC-X210	&EFS/G1.2	2	Labeling	62-5715
=SC-X214	&EFS/M18.2	2	End clamp 6mm	62-2993
=SC-X214	&EFS/M18.2	1	Group label holder	62-249120
=SC-X214	&EFS/M18.2	6	Terminal	62-282860
=SC-X214	&EFS/M18.2	1	Labeling	62-793502
=SC-X214	&EFS/M18.5	2	End plate	62-282386
=SC-X300	&EFS/R8.1	7	2-conductor/2-pin receptacle terminal 4 mm²	62-769171
=SC-X300	&EFS/R8.1	2	End clamp 6mm	62-2993
=SC-X300	&EFS/R8.1	1	Group label holder	62-249120
=SC-X300	&EFS/R8.1	2	End plate	62-769304
=SC-X300	&EFS/R8.1	1	Labeling	62-5715
=SC-X300	&EFS/R8.1	1	Crossbridge 2,5mm²	62-280402
=SC-X301	&EFS/R9.2	2	2-conductor/2-pin receptacle terminal 4 mm²	62-769171
=SC-X301	&EFS/R9.2	1	Terminal	62-769217
=SC-X301	&EFS/R9.2	1	End plate	62-769304
=SC-X301	&EFS/R9.2	2	End clamp 6mm	62-2993
=SC-X301	&EFS/R9.2	1	Labeling	62-5715
=SC-X301	&EFS/R9.2	1	Group label holder	62-249120
=SC-X301	&EFS/R9.2	2	Jumper	62-249125

Device tag list

Reference attributes	Placement	Quantity	Designation	Part number
=SC-X302	&EFS/R9.5	2	2-conductor/2-pin receptacle terminal 4 mm²	62-769171
=SC-X302	&EFS/R9.5	1	Terminal	62-769217
=SC-X302	&EFS/R9.5	1	End plate	62-769304
=SC-X302	&EFS/R9.5	1	End clamp 6mm	62-2993
=SC-X302	&EFS/R9.5	1	Labeling	62-5715
=SC-X302	&EFS/R9.5	1	Group label holder	62-249120
=SC-X302	&EFS/R9.5	2	Jumper	62-249125
=SC-X303	&EFS/R9.9	2	2-conductor/2-pin receptacle terminal 4 mm²	62-769171
=SC-X303	&EFS/R9.9	1	Terminal	62-769217
=SC-X303	&EFS/R9.9	1	End plate	62-769304
=SC-X303	&EFS/R9.9	2	End clamp 6mm	62-2993
=SC-X303	&EFS/R9.9	1	Labeling	62-5715
=SC-X303	&EFS/R9.9	1	Group label holder	62-249120
=SC-X400	&EFS/H1.2	1	End clamp 6mm	62-2993
=SC-X400	&EFS/H1.2	4	4-conductor feed-through terminal, 2.5 mm²	62-280833
=SC-X400	&EFS/H1.2	1	Labeling	62-793502
=SC-X400	&EFS/H1.2	1	Group label holder	62-249120
=SC-X400	&EFS/H1.2	3	Crossbridge 2,5mm²	62-280402
=SC-X400	&EFS/H1.4	1	End plate	62-1507
=SC-X402	&EFS/H1.6	1	End clamp 6mm	62-2993
=SC-X402	&EFS/H1.6	4	4-conductor feed-through terminal, 2.5 mm²	62-280833
=SC-X402	&EFS/H1.6	1	Labeling	62-793502
=SC-X402	&EFS/H1.6	1	Group label holder	62-249120
=SC-X402	&EFS/H1.6	3	Crossbridge 2,5mm²	62-280402
=SC-X402	&EFS/H1.8	1	End plate	62-1507
=SC-X407	&EFS/R1.2	4	4-conductor feed-through terminal, 2.5 mm²	62-280833
=SC-X407	&EFS/R1.2	1	Group label holder	62-249120

Device tag list

Reference attributes	Placement	Quantity	Designation	Part number
=SC-X407	&EFS/R1.2	2	End clamp 6mm	62-2993
=SC-X407	&EFS/R1.2	2	End plate	62-1507
=SC-X407	&EFS/R1.2	2	Crossbridge 2,5mm²	62-280402
=SC-X407	&EFS/R1.2	1	Labeling	62-793502
=SC-X407	&EFS/R1.8	1	Terminal	62-280837
=SC-X410	&EFS/E18.3	4	2-conductor/2-pin receptacle terminal 4 mm²	62-769171
=SC-X410	&EFS/E18.3	2	Multipoint connector	62-769104022
=SC-X410	&EFS/E18.3	2	End clamp 6mm	62-2993
=SC-X410	&EFS/E18.3	1	Group label holder	62-249120
=SC-X410	&EFS/E18.3	1	End plate	62-769304
=SC-X410	&EFS/E18.3	1	Terminal	62-769217
=SC-X410	&EFS/E18.3	1	Jumper	62-249125
=SC-X420	&EFS/R2.1	2	End clamp 6mm	62-2993
=SC-X420	&EFS/R2.1	1	Group label holder	62-249120
=SC-X420	&EFS/R2.1	2	2-conductor/2-pin receptacle terminal 4 mm²	62-769171
=SC-X420	&EFS/R2.1	1	Terminal	62-769217
=SC-X420	&EFS/R2.1	1	End plate	62-769304
=SC-X420	&EFS/R2.1	1	Labeling	62-5715
=SC-X451	&EFS/M25.2	4	4-conductor feed-through terminal, 2.5 mm²	62-280833
=SC-X451	&EFS/M25.2	1	End clamp 6mm	62-2993
=SC-X451	&EFS/M25.2	1	Group label holder	62-249120
=SC-X451	&EFS/M25.2	1	Labeling	62-793502
=SC-X451	&EFS/M25.2	2	End plate	62-1507
=SC-X451	&EFE/BE2.6	1	Terminal	62-283671
=SC-X451	&EFE/BE2.6	1	End plate	62-283352
=SC-X600	&EFS/M4.4	2	2-conductor/2-pin receptacle terminal 4 mm²	62-769171
=SC-X600	&EFS/M4.4	1	3-pole	62-769102

Device tag list

Reference attributes	Placement	Quantity	Designation	Part number
=SC-X600	&EFS/M4.4	2	End clamp 6mm	62-2993
=SC-X600	&EFS/M4.4	1	Group label holder	62-249120
=SC-X600	&EFS/M4.4	1	Terminal	62-769217
=SC-X600	&EFS/M4.4	1	End plate	62-769304
=SC-X701	&EFS/M13.4	4	4-conductor feed-through terminal, 2.5 mm²	62-280833
=SC-X701	&EFS/M13.4	1	End clamp 6mm	62-2993
=SC-X701	&EFS/M13.4	1	Group label holder	62-249120
=SC-X701	&EFS/M13.4	1	End plate	62-1507
=SC-X701	&EFS/M13.4	1	Labeling	62-793502
=SC-X710	&EFS/M6.2	1	Pin header 5-pole	62-231607
=SC-X710	&EFS/M6.2	1	Female connector 5-pole	62-769106
=SC-X710	&EFS/M6.2	2	Mounting material	62-769107
=SC-X711	&EFS/M5.2	1	Pin header 5-pole	62-231607
=SC-X711	&EFS/M5.2	1	Female connector 5-pole	62-769106
=SC-X711	&EFS/M5.2	2	Mounting material	62-769107
=SC-X712	&EFS/M4.8	1	Pin header 5-pole	62-231607
=SC-X712	&EFS/M4.8	1	Female connector 5-pole	62-769106
=SC-X712	&EFS/M4.8	2	Mounting material	62-769107
=SC-X720	&EFS/M28.8	2	Feed-through terminal	62-091315
=SC-X720	&EFS/M28.8	2	End clamp	62-2994
=SC-X720	&EFS/M28.8	1	End plate	62-264369
=SC-X720	&EFS/M28.8	1	Labeling	62-5715
=SC-X721	&EFS/M28.4	2	Feed-through terminal	62-091315
=SC-X721	&EFS/M28.4	2	End clamp	62-2994
=SC-X721	&EFS/M28.4	1	End plate	62-264369
=SC-X721	&EFS/M28.4	1	Labeling	62-5715
=SC-X722	&EFS/M28.2	2	Feed-through terminal	62-091315

Device tag list

Reference attributes	Placement	Quantity	Designation	Part number
=SC-X722	&EFS/M28.2	1	End plate	62-264369
=SC-X722	&EFS/M28.2	1	End clamp	62-2994
=SC-X722	&EFS/M28.2	1	Labeling	62-5715
=SC-X725	&EFS/M30.2	4	2-conductor/2-pin receptacle terminal 4 mm²	62-769171
=SC-X725	&EFS/M30.2	1	Multipoint connector	62-769104022
=SC-X725	&EFS/M30.2	1	End clamp 6mm	62-2993
=SC-X725	&EFS/M30.2	1	Group label holder	62-249120
=SC-X725	&EFS/M30.2	1	End plate	62-769304
=SC-X725	&EFS/M30.2	2	Labeling	62-5715
=SC-X726	&EFS/M16.1	1	4-conductor feed-through terminal, 2.5 mm²	62-280833
=SC-X726	&EFS/M16.1	1	End plate	62-1507
=SC-X726	&EFS/M16.1	1	Group label holder	62-249120
=SC-X726	&EFS/M16.1	1	End clamp 6mm	62-2993
=SC-X726	&EFS/M16.1	1	Labeling	62-793502
=SC-X730	&EFS/R15.1	6	2-conductor/2-pin receptacle terminal 4 mm²	62-769171
=SC-X730	&EFS/R15.1	1	6-pole	62-769106022
=SC-X730	&EFS/R15.1	1	End clamp 6mm	62-2993
=SC-X730	&EFS/R15.1	1	Group label holder	62-249120
=SC-X730	&EFS/R15.1	1	End plate	62-769304
=SC-X730	&EFS/R15.1	2	Labeling	62-5715
=SC-X731	&EFS/R16.1	6	2-conductor/2-pin receptacle terminal 4 mm²	62-769171
=SC-X731	&EFS/R16.1	1	6-pole	62-769106022
=SC-X731	&EFS/R16.1	1	End clamp 6mm	62-2993
=SC-X731	&EFS/R16.1	1	Group label holder	62-249120
=SC-X731	&EFS/R16.1	1	End plate	62-769304
=SC-X731	&EFS/R16.1	2	Labeling	62-5715
=SC-X732	&EFS/R17.1	6	2-conductor/2-pin receptacle terminal 4 mm²	62-769171

Device tag list

Reference attributes	Placement	Quantity	Designation	Part number
=SC-X732	&EFS/R17.1	1	6-pole	62-769106022
=SC-X732	&EFS/R17.1	1	End clamp 6mm	62-2993
=SC-X732	&EFS/R17.1	1	Group label holder	62-249120
=SC-X732	&EFS/R17.1	1	End plate	62-769304
=SC-X732	&EFS/R17.1	2	Labeling	62-5715
=SC-X750	&EFS/M29.3	2	2-conductor/2-pin receptacle terminal 4 mm²	62-769171
=SC-X750	&EFS/M29.3	1	Multipoint connector	62-769102022
=SC-X750	&EFS/M29.3	1	End clamp 6mm	62-2993
=SC-X750	&EFS/M29.3	1	Group label holder	62-249120
=SC-X750	&EFS/M29.3	1	End plate	62-769304
=SC-X750	&EFS/M29.3	2	Labeling	62-5715
=SC-X751	&EFS/M29.7	2	2-conductor/2-pin receptacle terminal 4 mm²	62-769171
=SC-X751	&EFS/M29.7	1	Multipoint connector	62-769102022
=SC-X751	&EFS/M29.7	1	End clamp 6mm	62-2993
=SC-X751	&EFS/M29.7	1	Group label holder	62-249120
=SC-X751	&EFS/M29.7	1	End plate	62-769304
=SC-X751	&EFS/M29.7	2	Labeling	62-5715
=SC-X752	&EFS/M31.2	3	2-conductor/2-pin receptacle terminal 4 mm²	62-769171
=SC-X752	&EFS/M31.2	1	Multipoint connector	62-769103022
=SC-X752	&EFS/M31.2	1	End clamp 6mm	62-2993
=SC-X752	&EFS/M31.2	1	Group label holder	62-249120
=SC-X752	&EFS/M31.2	1	End plate	62-769304
=SC-X752	&EFS/M31.2	2	Labeling	62-5715
=SC-Z11	&EFS/E15.5	2	Ferrite core	04-12090
=2_X-F101	&EFS/E2.2	1	NH fuse base	61-015947
=2_X-F102	&EFS/E2.3	1	NH fuse base	61-015947
=2_X-F103	&EFS/E2.4	1	NH fuse base	61-015947

Device tag list

Reference attributes	Placement	Quantity	Designation	Part number
=2_X-F104	&EFS/E2.5	1	NH fuse base	61-015947
=2_X-F105	&EFS/E2.5	1	NH fuse base	61-015947
=2_X-F106	&EFS/E2.6	1	NH fuse base	61-015947
=2_X-F107	&EFS/E2.7	1	NH fuse base	61-015947
=2_X-F108	&EFS/E2.8	1	NH fuse base	61-015947
=2_X-F109	&EFS/E2.8	1	NH fuse base	61-015947
=2_X-F201	&EFS/E3.2	1	NH fuse base	61-015947
=2_X-F202	&EFS/E3.3	1	NH fuse base	61-015947
=2_X-F203	&EFS/E3.4	1	NH fuse base	61-015947
=2_X-F204	&EFS/E3.5	1	NH fuse base	61-015947
=2_X-F205	&EFS/E3.5	1	NH fuse base	61-015947
=2_X-F206	&EFS/E3.6	1	NH fuse base	61-015947
=2_X-F207	&EFS/E3.7	1	NH fuse base	61-015947
=2_X-F208	&EFS/E3.8	1	NH fuse base	61-015947
=2_X-F209	&EFS/E3.8	1	NH fuse base	61-015947
=4_0-X30	&EFS/E17.1	1	4-conductor feed-through terminal, 2.5 mm²	62-280833
=4_0-X30	&EFS/E17.1	1	End plate	62-1507
=4_0-X30	&EFS/E17.1	2	End clamp 6mm	62-2993
=4_0-X30	&EFS/E17.1	1	Group label holder	62-249120
=4_0-X30	&EFS/E17.1	1	Labeling	62-793502
=4_1-F2	&EFS/E17.6	1	Circuit breaker K5,8A	61-126405
=4_1-F2	&EFS/E17.6	1	Auxiliary switch	61-126999
=4_2-F2	&EFS/E20.3	1	Circuit breaker K5,8A	61-126405
=4_2-F2	&EFS/E20.3	1	Switch unit	60-0500
=4_2-F2	&EFS/E20.3	1	Auxiliary switch	61-126999
=4_2-F2-X1	&EFS/E20.5	4	2-conductor/2-pin receptacle terminal 4 mm²	62-769171
=4_2-F2-X1	&EFS/E20.5	2	Multipoint connector	62-769104022

Device tag list

Reference attributes	Placement	Quantity	Designation	Part number
=4_2-F2-X1	&EFS/E20.5	2	End clamp 6mm	62-2993
=4_2-F2-X1	&EFS/E20.5	1	Group label holder	62-249120
=4_2-F2-X1	&EFS/E20.5	1	End plate	62-769304
=4_2-F2-X1	&EFS/E20.5	1	Terminal	62-769217
=4_2-X411	&EFS/E18.3	8	2-conductor/2-pin receptacle terminal 4 mm²	62-769171
=4_2-X411	&EFS/E18.3	1	End clamp 6mm	62-2993
=4_2-X411	&EFS/E18.3	1	Group label holder	62-249120
=4_2-X411	&EFS/E18.3	1	End plate	62-769304
=4_3-F2	&EFS/E17.9	1	Circuit breaker K5,8A	61-126405
=4_3-F2	&EFS/E17.9	1	Auxiliary switch	61-126999
=4_4-F2	&EFS/E21.3	1	Circuit breaker K5,8A	61-126405
=4_4-F2	&EFS/E21.3	1	Switch unit	60-0500
=4_4-F2	&EFS/E21.3	1	Auxiliary switch	61-126999
=4_4-F2-X1	&EFS/E21.5	4	2-conductor/2-pin receptacle terminal 4 mm²	62-769171
=4_4-F2-X1	&EFS/E21.5	2	Multipoint connector	62-769104022
=4_4-F2-X1	&EFS/E21.5	2	End clamp 6mm	62-2993
=4_4-F2-X1	&EFS/E21.5	1	Group label holder	62-249120
=4_4-F2-X1	&EFS/E21.5	1	End plate	62-769304
=4_4-F2-X1	&EFS/E21.5	1	Terminal	62-769217
=4_4-X411	&EFS/E18.7	4	2-conductor/2-pin receptacle terminal 4 mm²	62-769171
=4_4-X411	&EFS/E18.7	2	Multipoint connector	62-769104022
=4_4-X411	&EFS/E18.7	2	End clamp 6mm	62-2993
=4_4-X411	&EFS/E18.7	1	Group label holder	62-249120
=4_4-X411	&EFS/E18.7	1	End plate	62-769304
=4_4-X411	&EFS/E18.7	1	Terminal	62-769217
=4_5-F2	&EFS/E22.4	1	Circuit breaker K0,15A	61-126415
=4_5-F2	&EFS/E22.4	1	Auxiliary switch	61-126999

Device tag list

Reference attributes	Placement	Quantity	Designation	Part number
=4_5-K10	&EFS/M25.2	1	Relay	60-13690
=4_5-R3	&EFS/M25.5	1	Resistor	01-8330035
=4_5-S2	&EFS/M25.2	1	Pushbutton	60-207348
=4_5-X450	&EFS/M25.8	1	4-conductor feed-through terminal, 2.5 mm²	62-280833
=4_5-X450	&EFS/M25.8	1	End plate	62-1507
=4_5-X450	&EFS/M25.8	1	End clamp 6mm	62-2993
=4_5-X450	&EFS/M25.8	1	Group label holder	62-249120
=4_5-X450	&EFS/M25.8	1	Labeling	62-793502
=4_6-F2	&EFS/E22.7	1	Circuit breaker K0,15A	61-126415
=4_6-F2	&EFS/E22.7	1	Auxiliary switch	61-126999
=4_6-K10	&EFS/M26.2	1	Relay	60-13690
=4_6-R3	&EFS/M26.5	1	Resistor	01-8330035
=4_6-S2	&EFS/M26.2	1	Pushbutton	60-207348
=4_6-X450	&EFS/M26.8	1	End clamp	62-2994
=4_6-X450	&EFS/M26.8	1	Feed-through terminal	62-091315
=4_6-X450	&EFS/M26.8	1	Labeling	62-248566
=5_0-X10	&EFS/M21.2	9	4-conductor feed-through terminal, 2.5 mm²	62-280833
=5_0-X10	&EFS/M21.2	2	End clamp 6mm	62-2993
=5_0-X10	&EFS/M21.2	1	Group label holder	62-249120
=5_0-X10	&EFS/M21.2	1	1 ... 50 (2x)	62-793566
=5_0-X10	&EFS/M21.3	2	End plate	62-1507
=5_0-X10	&EFS/M21.4	1	Terminal	62-283671
=5_0-X10	&EFS/M21.4	1	End plate	62-283352
=5_0-X10	&EFS/M21.5	3	Terminal 6mm²	62-282681
=5_0-X10	&EFS/M21.9	1	Terminal 6mm²	62-282687
=5_0-X10	&EFS/M21.9	1	End plate	62-282339
=5_0-X10	&EFS/M22.5	2	Crossbridge 2,5mm²	62-280402

Device tag list

Reference attributes	Placement	Quantity	Designation	Part number
=5_0-X470	&EFS/E5.8	2	2-conductor feed-through terminal, 6 mm²	62-782601
=5_0-X470	&EFS/E5.8	3	End plate	62-209192
=5_0-X470	&EFS/E5.8	1	Cover	62-282415
=5_0-X470	&EFS/E5.8	1	Labeling	62-793502
=5_0-X470	&EFS/E5.8	1	Group label holder	62-249120
=5_0-X470	&EFS/E5.8	2	End clamp 6mm	62-2993
=5_0-X470	&EFS/E5.8	1	End clamp	62-249117
=5_1-F10	&EFS/M23.1	1	Insulation Monitoring	60-16697
=5_1-F11	&EFS/M23.6	1	Measuring instrument	60-16691
=5_2-F10	&EFS/M24.1	1	Insulation Monitoring	60-16697
=5_2-F11	&EFS/M24.6	1	Measuring instrument	60-16691
=6_0-A26	&EFS/R4.2	1	Router	36-07010
=6_0-A27	&EFS/R4.2	1	Monitor	16-1541
=6_0-X500	&EFS/R6.1	1	Wall bushing	65-081022
=6_0-X500	&EFS/R6.1	1	Cover cap	65-081023
=6_1-A26	&EFS/R5.1	1	Ethernet switch	36-0709
=6_1-H1	&EFS/M13.5	1	Indicator light	20-06797
=6_1-H1	&EFS/M13.5	1	LED element	20-06800
=6_1-H2	&EFS/M13.7	1	Indicator light	20-06795
=6_1-H2	&EFS/M13.7	1	LED element	20-06800
=6_1-H3	&EFS/M13.8	1	Indicator light	20-06796
=6_1-H3	&EFS/M13.8	1	LED element	20-06800
=6_1-X500	&EFS/R6.2	1	Wall bushing	65-081024
=6_1-X500	&EFS/R6.2	1	Cover cap	65-081023
=7_0-X28	&EFS/R18.2	2	4-conductor feed-through terminal, 2.5 mm²	62-280833
=7_0-X28	&EFS/R18.2	1	End plate	62-1507
=7_0-X28	&EFS/R18.2	2	End clamp 6mm	62-2993

Device tag list

Reference attributes	Placement	Quantity	Designation	Part number
=7_0-X28	&EFS/R18.2	1	Group label holder	62-249120
=7_0-X28	&EFS/R18.2	1	Labeling	62-793502
=7_0-X28	&EFS/R18.2	1	Terminal	62-280837
=7_1-A28	&EFS/R18.1	1	Ethernet converter	36-0743
=7_1-A29	&EFS/R6.6	1	Patch panel	42-4130
=7_1-W927	&EFS/R6.6	1	Fiber optic cable	16-61206
=10_2-Q10	&EFS/D2.1	1	Power circuit breaker	60-005393
=10_3-X40	&EFS/D2.9	2	End plate	62-264369
=10_3-X40	&EFS/D2.9	2	Feed-through terminal	62-091315
=10_3-X40	&EFS/D2.9	4	End clamp	62-2994
=10_3-X40	&EFS/D2.9	2	Labeling	62-5715
=10_3-X40	&EFS/D2.10	1	Labeling	62-793502
=11_0-X101	&EFS/R7.1	1	Termination connector	43-9389
=11_1-A20	&EFS/R10.1	1	String Monitor Controller	SCSMC-20.GR1
=11_1-A21	&EFS/R11.1	1	Repeater	SMU8-HUB
=11_1-A22	&EFS/R11.6	1	Repeater	SMU8-HUB
=11_1-X100	&EFS/R11.9	1	Termination connector	43-9389
=11_1-X717	&EFS/R10.7	1	Adapter	95-530063
=11_1-X718	&EFS/R10.4	1	Adapter	95-530063
=11_2-A20	&EFS/R12.1	1	String Monitor Controller	SCSMC-20.GR1
=11_2-A21	&EFS/R13.1	1	Repeater	SMU8-HUB
=11_2-A22	&EFS/R13.6	1	Repeater	SMU8-HUB
=11_2-A23	&EFS/R14.1	1	Repeater	SMU8-HUB
=11_2-X100	&EFS/R14.5	1	Termination connector	43-9389
=11_2-X717	&EFS/R12.7	1	Adapter	95-530063
=11_2-X718	&EFS/R12.4	1	Adapter	95-530063
=14_4-K26	&EFS/M31.8	1	Relay	60-154050

Device tag list

Reference attributes	Placement	Quantity	Designation	Part number
=14_4-K26	&EFS/M31.8	1	Insulating plate	60-154810
=14_4-X760	&EFS/M31.7	2	2-conductor/2-pin receptacle terminal 4 mm²	62-769171
=14_4-X760	&EFS/M31.7	1	Multipoint connector	62-769102022
=14_4-X760	&EFS/M31.7	1	End clamp 6mm	62-2993
=14_4-X760	&EFS/M31.7	1	Group label holder	62-249120
=14_4-X760	&EFS/M31.7	1	End plate	62-769304
=14_4-X760	&EFS/M31.7	1	Labeling	62-5715
=A1-F101	&EFS/E7.3	1	LV/HRC fuse 200 A	61-0159455
=A1-F102	&EFS/E7.4	1	LV/HRC fuse 200 A	61-0159455
=A1-F103	&EFS/E7.5	1	LV/HRC fuse 200 A	61-0159455
=A1-F104	&EFS/E7.5	1	LV/HRC fuse 200 A	61-0159455
=A1-F105	&EFS/E7.6	1	LV/HRC fuse 200 A	61-0159455
=A1-F106	&EFS/E7.7	1	LV/HRC fuse 200 A	61-0159455
=A1-F107	&EFS/E7.8	1	LV/HRC fuse 200 A	61-0159455
=A1-F108	&EFS/E7.8	1	LV/HRC fuse 200 A	61-0159455
=A1-F109	&EFS/E7.9	1	LV/HRC fuse 200 A	61-0159455
=A1-F201	&EFS/E7.3	1	LV/HRC fuse 200 A	61-0159455
=A1-F202	&EFS/E7.4	1	LV/HRC fuse 200 A	61-0159455
=A1-F203	&EFS/E7.5	1	LV/HRC fuse 200 A	61-0159455
=A1-F204	&EFS/E7.5	1	LV/HRC fuse 200 A	61-0159455
=A1-F205	&EFS/E7.6	1	LV/HRC fuse 200 A	61-0159455
=A1-F206	&EFS/E7.7	1	LV/HRC fuse 200 A	61-0159455
=A1-F207	&EFS/E7.8	1	LV/HRC fuse 200 A	61-0159455
=A1-F208	&EFS/E7.8	1	LV/HRC fuse 200 A	61-0159455
=A1-F209	&EFS/E7.9	1	LV/HRC fuse 200 A	61-0159455
=A2-F101	&EFS/E7.3	1	LV/HRC fuse 250 A	61-015945
=A2-F102	&EFS/E7.4	1	LV/HRC fuse 250 A	61-015945

Device tag list

Reference attributes	Placement	Quantity	Designation	Part number
=A2-F103	&EFS/E7.5	1	LV/HRC fuse 250 A	61-015945
=A2-F104	&EFS/E7.5	1	LV/HRC fuse 250 A	61-015945
=A2-F105	&EFS/E7.6	1	LV/HRC fuse 250 A	61-015945
=A2-F106	&EFS/E7.7	1	LV/HRC fuse 250 A	61-015945
=A2-F107	&EFS/E7.8	1	LV/HRC fuse 250 A	61-015945
=A2-F108	&EFS/E7.8	1	LV/HRC fuse 250 A	61-015945
=A2-F109	&EFS/E7.9	1	LV/HRC fuse 250 A	61-015945
=A2-F201	&EFS/E7.3	1	LV/HRC fuse 250 A	61-015945
=A2-F202	&EFS/E7.4	1	LV/HRC fuse 250 A	61-015945
=A2-F203	&EFS/E7.5	1	LV/HRC fuse 250 A	61-015945
=A2-F204	&EFS/E7.5	1	LV/HRC fuse 250 A	61-015945
=A2-F205	&EFS/E7.6	1	LV/HRC fuse 250 A	61-015945
=A2-F206	&EFS/E7.7	1	LV/HRC fuse 250 A	61-015945
=A2-F207	&EFS/E7.8	1	LV/HRC fuse 250 A	61-015945
=A2-F208	&EFS/E7.8	1	LV/HRC fuse 250 A	61-015945
=A2-F209	&EFS/E7.9	1	LV/HRC fuse 250 A	61-015945
=A3-F101	&EFS/E7.3	1	LV/HRC fuse 315 A	61-015950
=A3-F102	&EFS/E7.4	1	LV/HRC fuse 315 A	61-015950
=A3-F103	&EFS/E7.5	1	LV/HRC fuse 315 A	61-015950
=A3-F104	&EFS/E7.5	1	LV/HRC fuse 315 A	61-015950
=A3-F105	&EFS/E7.6	1	LV/HRC fuse 315 A	61-015950
=A3-F106	&EFS/E7.7	1	LV/HRC fuse 315 A	61-015950
=A3-F107	&EFS/E7.8	1	LV/HRC fuse 315 A	61-015950
=A3-F201	&EFS/E7.3	1	LV/HRC fuse 315 A	61-015950
=A3-F202	&EFS/E7.4	1	LV/HRC fuse 315 A	61-015950
=A3-F203	&EFS/E7.5	1	LV/HRC fuse 315 A	61-015950
=A3-F204	&EFS/E7.5	1	LV/HRC fuse 315 A	61-015950

Device tag list

Reference attributes	Placement	Quantity	Designation	Part number
=A3-F205	&EFS/E7.6	1	LV/HRC fuse 315 A	61-015950
=A3-F206	&EFS/E7.7	1	LV/HRC fuse 315 A	61-015950
=A3-F207	&EFS/E7.8	1	LV/HRC fuse 315 A	61-015950
=A4-F101	&EFS/E7.3	1	LV/HRC fuse 400 A	61-015960
=A4-F102	&EFS/E7.4	1	LV/HRC fuse 400 A	61-015960
=A4-F103	&EFS/E7.5	1	LV/HRC fuse 400 A	61-015960
=A4-F104	&EFS/E7.5	1	LV/HRC fuse 400 A	61-015960
=A4-F105	&EFS/E7.6	1	LV/HRC fuse 400 A	61-015960
=A4-F106	&EFS/E7.7	1	LV/HRC fuse 400 A	61-015960
=A4-F201	&EFS/E7.3	1	LV/HRC fuse 400 A	61-015960
=A4-F202	&EFS/E7.4	1	LV/HRC fuse 400 A	61-015960
=A4-F203	&EFS/E7.5	1	LV/HRC fuse 400 A	61-015960
=A4-F204	&EFS/E7.5	1	LV/HRC fuse 400 A	61-015960
=A4-F205	&EFS/E7.6	1	LV/HRC fuse 400 A	61-015960
=A4-F206	&EFS/E7.7	1	LV/HRC fuse 400 A	61-015960
=A5-F101	&EFS/E7.3	1	LV/HRC fuse 125 A	61-0159456
=A5-F102	&EFS/E7.4	1	LV/HRC fuse 125 A	61-0159456
=A5-F103	&EFS/E7.5	1	LV/HRC fuse 125 A	61-0159456
=A5-F104	&EFS/E7.5	1	LV/HRC fuse 125 A	61-0159456
=A5-F105	&EFS/E7.6	1	LV/HRC fuse 125 A	61-0159456
=A5-F106	&EFS/E7.7	1	LV/HRC fuse 125 A	61-0159456
=A5-F107	&EFS/E7.8	1	LV/HRC fuse 125 A	61-0159456
=A5-F108	&EFS/E7.8	1	LV/HRC fuse 125 A	61-0159456
=A5-F109	&EFS/E7.9	1	LV/HRC fuse 125 A	61-0159456
=A5-F201	&EFS/E7.3	1	LV/HRC fuse 125 A	61-0159456
=A5-F202	&EFS/E7.4	1	LV/HRC fuse 125 A	61-0159456
=A5-F203	&EFS/E7.5	1	LV/HRC fuse 125 A	61-0159456

Device tag list

Reference attributes	Placement	Quantity	Designation	Part number
=A5-F204	&EFS/E7.5	1	LV/HRC fuse 125 A	61-0159456
=A5-F205	&EFS/E7.6	1	LV/HRC fuse 125 A	61-0159456
=A5-F206	&EFS/E7.7	1	LV/HRC fuse 125 A	61-0159456
=A5-F207	&EFS/E7.8	1	LV/HRC fuse 125 A	61-0159456
=A5-F208	&EFS/E7.8	1	LV/HRC fuse 125 A	61-0159456
=A5-F209	&EFS/E7.9	1	LV/HRC fuse 125 A	61-0159456
=A6-F101	&EFS/E7.3	1	LV/HRC fuse 160 A	61-0159457
=A6-F102	&EFS/E7.4	1	LV/HRC fuse 160 A	61-0159457
=A6-F103	&EFS/E7.5	1	LV/HRC fuse 160 A	61-0159457
=A6-F104	&EFS/E7.5	1	LV/HRC fuse 160 A	61-0159457
=A6-F105	&EFS/E7.6	1	LV/HRC fuse 160 A	61-0159457
=A6-F106	&EFS/E7.7	1	LV/HRC fuse 160 A	61-0159457
=A6-F107	&EFS/E7.8	1	LV/HRC fuse 160 A	61-0159457
=A6-F108	&EFS/E7.8	1	LV/HRC fuse 160 A	61-0159457
=A6-F109	&EFS/E7.9	1	LV/HRC fuse 160 A	61-0159457
=A6-F201	&EFS/E7.3	1	LV/HRC fuse 160 A	61-0159457
=A6-F202	&EFS/E7.4	1	LV/HRC fuse 160 A	61-0159457
=A6-F203	&EFS/E7.5	1	LV/HRC fuse 160 A	61-0159457
=A6-F204	&EFS/E7.5	1	LV/HRC fuse 160 A	61-0159457
=A6-F205	&EFS/E7.6	1	LV/HRC fuse 160 A	61-0159457
=A6-F206	&EFS/E7.7	1	LV/HRC fuse 160 A	61-0159457
=A6-F207	&EFS/E7.8	1	LV/HRC fuse 160 A	61-0159457
=A6-F208	&EFS/E7.8	1	LV/HRC fuse 160 A	61-0159457
=A6-F209	&EFS/E7.9	1	LV/HRC fuse 160 A	61-0159457
=B1-F101	&EFS/E8.3	1	LV/HRC fuse 200 A	61-0159455
=B1-F102	&EFS/E8.4	1	LV/HRC fuse 200 A	61-0159455
=B1-F103	&EFS/E8.5	1	LV/HRC fuse 200 A	61-0159455

Device tag list

Reference attributes	Placement	Quantity	Designation	Part number
=B1-F104	&EFS/E8.5	1	LV/HRC fuse 200 A	61-0159455
=B1-F105	&EFS/E8.6	1	LV/HRC fuse 200 A	61-0159455
=B1-F106	&EFS/E8.7	1	LV/HRC fuse 200 A	61-0159455
=B1-F107	&EFS/E8.8	1	LV/HRC fuse 200 A	61-0159455
=B1-F108	&EFS/E8.8	1	LV/HRC fuse 200 A	61-0159455
=B1-F109	&EFS/E8.9	1	LV/HRC fuse 200 A	61-0159455
=B1-F201	&EFS/E8.3	1	Disconnect knife	61-014021
=B1-F202	&EFS/E8.4	1	Disconnect knife	61-014021
=B1-F203	&EFS/E8.5	1	Disconnect knife	61-014021
=B1-F204	&EFS/E8.5	1	Disconnect knife	61-014021
=B1-F205	&EFS/E8.6	1	Disconnect knife	61-014021
=B1-F206	&EFS/E8.7	1	Disconnect knife	61-014021
=B1-F207	&EFS/E8.8	1	Disconnect knife	61-014021
=B1-F208	&EFS/E8.8	1	Disconnect knife	61-014021
=B1-F209	&EFS/E8.9	1	Disconnect knife	61-014021
=B2-F101	&EFS/E8.3	1	LV/HRC fuse 250 A	61-015945
=B2-F102	&EFS/E8.4	1	LV/HRC fuse 250 A	61-015945
=B2-F103	&EFS/E8.5	1	LV/HRC fuse 250 A	61-015945
=B2-F104	&EFS/E8.5	1	LV/HRC fuse 250 A	61-015945
=B2-F105	&EFS/E8.6	1	LV/HRC fuse 250 A	61-015945
=B2-F106	&EFS/E8.7	1	LV/HRC fuse 250 A	61-015945
=B2-F107	&EFS/E8.8	1	LV/HRC fuse 250 A	61-015945
=B2-F108	&EFS/E8.8	1	LV/HRC fuse 250 A	61-015945
=B2-F109	&EFS/E8.9	1	LV/HRC fuse 250 A	61-015945
=B2-F201	&EFS/E8.3	1	Disconnect knife	61-014021
=B2-F202	&EFS/E8.4	1	Disconnect knife	61-014021
=B2-F203	&EFS/E8.5	1	Disconnect knife	61-014021

Device tag list

Reference attributes	Placement	Quantity	Designation	Part number
=B2-F204	&EFS/E8.5	1	Disconnect knife	61-014021
=B2-F205	&EFS/E8.6	1	Disconnect knife	61-014021
=B2-F206	&EFS/E8.7	1	Disconnect knife	61-014021
=B2-F207	&EFS/E8.8	1	Disconnect knife	61-014021
=B2-F208	&EFS/E8.8	1	Disconnect knife	61-014021
=B2-F209	&EFS/E8.9	1	Disconnect knife	61-014021
=B3-F101	&EFS/E8.3	1	LV/HRC fuse 315 A	61-015950
=B3-F102	&EFS/E8.4	1	LV/HRC fuse 315 A	61-015950
=B3-F103	&EFS/E8.5	1	LV/HRC fuse 315 A	61-015950
=B3-F104	&EFS/E8.5	1	LV/HRC fuse 315 A	61-015950
=B3-F105	&EFS/E8.6	1	LV/HRC fuse 315 A	61-015950
=B3-F106	&EFS/E8.7	1	LV/HRC fuse 315 A	61-015950
=B3-F107	&EFS/E8.8	1	LV/HRC fuse 315 A	61-015950
=B3-F201	&EFS/E8.3	1	Disconnect knife	61-014021
=B3-F202	&EFS/E8.4	1	Disconnect knife	61-014021
=B3-F203	&EFS/E8.5	1	Disconnect knife	61-014021
=B3-F204	&EFS/E8.5	1	Disconnect knife	61-014021
=B3-F205	&EFS/E8.6	1	Disconnect knife	61-014021
=B3-F206	&EFS/E8.7	1	Disconnect knife	61-014021
=B3-F207	&EFS/E8.8	1	Disconnect knife	61-014021
=B4-F101	&EFS/E8.3	1	LV/HRC fuse 400 A	61-015960
=B4-F102	&EFS/E8.4	1	LV/HRC fuse 400 A	61-015960
=B4-F103	&EFS/E8.5	1	LV/HRC fuse 400 A	61-015960
=B4-F104	&EFS/E8.5	1	LV/HRC fuse 400 A	61-015960
=B4-F105	&EFS/E8.6	1	LV/HRC fuse 400 A	61-015960
=B4-F106	&EFS/E8.7	1	LV/HRC fuse 400 A	61-015960
=B4-F201	&EFS/E8.3	1	Disconnect knife	61-014021

Device tag list

Reference attributes	Placement	Quantity	Designation	Part number
=B4-F202	&EFS/E8.4	1	Disconnect knife	61-014021
=B4-F203	&EFS/E8.5	1	Disconnect knife	61-014021
=B4-F204	&EFS/E8.5	1	Disconnect knife	61-014021
=B4-F205	&EFS/E8.6	1	Disconnect knife	61-014021
=B4-F206	&EFS/E8.7	1	Disconnect knife	61-014021
=B5-F101	&EFS/E8.3	1	LV/HRC fuse 125 A	61-0159456
=B5-F102	&EFS/E8.4	1	LV/HRC fuse 125 A	61-0159456
=B5-F103	&EFS/E8.5	1	LV/HRC fuse 125 A	61-0159456
=B5-F104	&EFS/E8.5	1	LV/HRC fuse 125 A	61-0159456
=B5-F105	&EFS/E8.6	1	LV/HRC fuse 125 A	61-0159456
=B5-F106	&EFS/E8.7	1	LV/HRC fuse 125 A	61-0159456
=B5-F107	&EFS/E8.8	1	LV/HRC fuse 125 A	61-0159456
=B5-F108	&EFS/E8.8	1	LV/HRC fuse 125 A	61-0159456
=B5-F109	&EFS/E8.9	1	LV/HRC fuse 125 A	61-0159456
=B5-F201	&EFS/E8.3	1	Disconnect knife	61-014021
=B5-F202	&EFS/E8.4	1	Disconnect knife	61-014021
=B5-F203	&EFS/E8.5	1	Disconnect knife	61-014021
=B5-F204	&EFS/E8.5	1	Disconnect knife	61-014021
=B5-F205	&EFS/E8.6	1	Disconnect knife	61-014021
=B5-F206	&EFS/E8.7	1	Disconnect knife	61-014021
=B5-F207	&EFS/E8.8	1	Disconnect knife	61-014021
=B5-F208	&EFS/E8.8	1	Disconnect knife	61-014021
=B5-F209	&EFS/E8.9	1	Disconnect knife	61-014021
=B6-F101	&EFS/E8.3	1	LV/HRC fuse 160 A	61-0159457
=B6-F102	&EFS/E8.4	1	LV/HRC fuse 160 A	61-0159457
=B6-F103	&EFS/E8.5	1	LV/HRC fuse 160 A	61-0159457
=B6-F104	&EFS/E8.5	1	LV/HRC fuse 160 A	61-0159457

Device tag list

Reference attributes	Placement	Quantity	Designation	Part number
=B6-F105	&EFS/E8.6	1	LV/HRC fuse 160 A	61-0159457
=B6-F106	&EFS/E8.7	1	LV/HRC fuse 160 A	61-0159457
=B6-F107	&EFS/E8.8	1	LV/HRC fuse 160 A	61-0159457
=B6-F108	&EFS/E8.8	1	LV/HRC fuse 160 A	61-0159457
=B6-F109	&EFS/E8.9	1	LV/HRC fuse 160 A	61-0159457
=B6-F201	&EFS/E8.3	1	Disconnect knife	61-014021
=B6-F202	&EFS/E8.4	1	Disconnect knife	61-014021
=B6-F203	&EFS/E8.5	1	Disconnect knife	61-014021
=B6-F204	&EFS/E8.5	1	Disconnect knife	61-014021
=B6-F205	&EFS/E8.6	1	Disconnect knife	61-014021
=B6-F206	&EFS/E8.7	1	Disconnect knife	61-014021
=B6-F207	&EFS/E8.8	1	Disconnect knife	61-014021
=B6-F208	&EFS/E8.8	1	Disconnect knife	61-014021
=B6-F209	&EFS/E8.9	1	Disconnect knife	61-014021
=C1-F101	&EFS/E9.3	1	Disconnect knife	61-014021
=C1-F102	&EFS/E9.4	1	Disconnect knife	61-014021
=C1-F103	&EFS/E9.5	1	Disconnect knife	61-014021
=C1-F104	&EFS/E9.5	1	Disconnect knife	61-014021
=C1-F105	&EFS/E9.6	1	Disconnect knife	61-014021
=C1-F106	&EFS/E9.7	1	Disconnect knife	61-014021
=C1-F107	&EFS/E9.8	1	Disconnect knife	61-014021
=C1-F108	&EFS/E9.8	1	Disconnect knife	61-014021
=C1-F109	&EFS/E9.9	1	Disconnect knife	61-014021
=C1-F201	&EFS/E9.3	1	Fuse 250A	61-0201521
=C1-F202	&EFS/E9.4	1	Fuse 250A	61-0201521
=C1-F203	&EFS/E9.5	1	Fuse 250A	61-0201521
=C1-F204	&EFS/E9.5	1	Fuse 250A	61-0201521

Device tag list

Reference attributes	Placement	Quantity	Designation	Part number
=C1-F205	&EFS/E9.6	1	Fuse 250A	61-0201521
=C1-F206	&EFS/E9.7	1	Fuse 250A	61-0201521
=C1-F207	&EFS/E9.8	1	Fuse 250A	61-0201521
=C1-F208	&EFS/E9.8	1	Fuse 250A	61-0201521
=C1-F209	&EFS/E9.9	1	Fuse 250A	61-0201521
=C2-F101	&EFS/E9.3	1	Disconnect knife	61-014021
=C2-F102	&EFS/E9.4	1	Disconnect knife	61-014021
=C2-F103	&EFS/E9.5	1	Disconnect knife	61-014021
=C2-F104	&EFS/E9.5	1	Disconnect knife	61-014021
=C2-F105	&EFS/E9.6	1	Disconnect knife	61-014021
=C2-F106	&EFS/E9.7	1	Disconnect knife	61-014021
=C2-F107	&EFS/E9.8	1	Disconnect knife	61-014021
=C2-F108	&EFS/E9.8	1	Disconnect knife	61-014021
=C2-F109	&EFS/E9.9	1	Disconnect knife	61-014021
=C2-F201	&EFS/E9.3	1	Fuse 250A	61-0201521
=C2-F202	&EFS/E9.4	1	Fuse 250A	61-0201521
=C2-F203	&EFS/E9.5	1	Fuse 250A	61-0201521
=C2-F204	&EFS/E9.5	1	Fuse 250A	61-0201521
=C2-F205	&EFS/E9.6	1	Fuse 250A	61-0201521
=C2-F206	&EFS/E9.7	1	Fuse 250A	61-0201521
=C2-F207	&EFS/E9.8	1	Fuse 250A	61-0201521
=C2-F208	&EFS/E9.8	1	Fuse 250A	61-0201521
=C2-F209	&EFS/E9.9	1	Fuse 250A	61-0201521
=C3-F101	&EFS/E9.3	1	Disconnect knife	61-014021
=C3-F102	&EFS/E9.4	1	Disconnect knife	61-014021
=C3-F103	&EFS/E9.5	1	Disconnect knife	61-014021
=C3-F104	&EFS/E9.5	1	Disconnect knife	61-014021

Device tag list

Reference attributes	Placement	Quantity	Designation	Part number
=C3-F105	&EFS/E9.6	1	Disconnect knife	61-014021
=C3-F106	&EFS/E9.7	1	Disconnect knife	61-014021
=C3-F107	&EFS/E9.8	1	Disconnect knife	61-014021
=C3-F201	&EFS/E9.3	1	Fuse 250A	61-0201521
=C3-F202	&EFS/E9.4	1	Fuse 250A	61-0201521
=C3-F203	&EFS/E9.5	1	Fuse 250A	61-0201521
=C3-F204	&EFS/E9.5	1	Fuse 250A	61-0201521
=C3-F205	&EFS/E9.6	1	Fuse 250A	61-0201521
=C3-F206	&EFS/E9.7	1	Fuse 250A	61-0201521
=C3-F207	&EFS/E9.8	1	Fuse 250A	61-0201521
=C4-F101	&EFS/E9.3	1	Disconnect knife	61-014021
=C4-F102	&EFS/E9.4	1	Disconnect knife	61-014021
=C4-F103	&EFS/E9.5	1	Disconnect knife	61-014021
=C4-F104	&EFS/E9.5	1	Disconnect knife	61-014021
=C4-F105	&EFS/E9.6	1	Disconnect knife	61-014021
=C4-F106	&EFS/E9.7	1	Disconnect knife	61-014021
=C4-F201	&EFS/E9.3	1	Fuse 250A	61-0201521
=C4-F202	&EFS/E9.4	1	Fuse 250A	61-0201521
=C4-F203	&EFS/E9.5	1	Fuse 250A	61-0201521
=C4-F204	&EFS/E9.5	1	Fuse 250A	61-0201521
=C4-F205	&EFS/E9.6	1	Fuse 250A	61-0201521
=C4-F206	&EFS/E9.7	1	Fuse 250A	61-0201521
=C5-F101	&EFS/E9.3	1	Disconnect knife	61-014021
=C5-F102	&EFS/E9.4	1	Disconnect knife	61-014021
=C5-F103	&EFS/E9.5	1	Disconnect knife	61-014021
=C5-F104	&EFS/E9.5	1	Disconnect knife	61-014021
=C5-F105	&EFS/E9.6	1	Disconnect knife	61-014021

Device tag list

Reference attributes	Placement	Quantity	Designation	Part number
=C5-F106	&EFS/E9.7	1	Disconnect knife	61-014021
=C5-F107	&EFS/E9.8	1	Disconnect knife	61-014021
=C5-F108	&EFS/E9.8	1	Disconnect knife	61-014021
=C5-F109	&EFS/E9.9	1	Disconnect knife	61-014021
=C5-F201	&EFS/E9.3	1	Fuse 250A	61-0201521
=C5-F202	&EFS/E9.4	1	Fuse 250A	61-0201521
=C5-F203	&EFS/E9.5	1	Fuse 250A	61-0201521
=C5-F204	&EFS/E9.5	1	Fuse 250A	61-0201521
=C5-F205	&EFS/E9.6	1	Fuse 250A	61-0201521
=C5-F206	&EFS/E9.7	1	Fuse 250A	61-0201521
=C5-F207	&EFS/E9.8	1	Fuse 250A	61-0201521
=C5-F208	&EFS/E9.8	1	Fuse 250A	61-0201521
=C5-F209	&EFS/E9.9	1	Fuse 250A	61-0201521
=C6-F101	&EFS/E9.3	1	Disconnect knife	61-014021
=C6-F102	&EFS/E9.4	1	Disconnect knife	61-014021
=C6-F103	&EFS/E9.5	1	Disconnect knife	61-014021
=C6-F104	&EFS/E9.5	1	Disconnect knife	61-014021
=C6-F105	&EFS/E9.6	1	Disconnect knife	61-014021
=C6-F106	&EFS/E9.7	1	Disconnect knife	61-014021
=C6-F107	&EFS/E9.8	1	Disconnect knife	61-014021
=C6-F108	&EFS/E9.8	1	Disconnect knife	61-014021
=C6-F109	&EFS/E9.9	1	Disconnect knife	61-014021
=C6-F201	&EFS/E9.3	1	Fuse 250A	61-0201521
=C6-F202	&EFS/E9.4	1	Fuse 250A	61-0201521
=C6-F203	&EFS/E9.5	1	Fuse 250A	61-0201521
=C6-F204	&EFS/E9.5	1	Fuse 250A	61-0201521
=C6-F205	&EFS/E9.6	1	Fuse 250A	61-0201521

Device tag list

Reference attributes	Placement	Quantity	Designation	Part number
=C6-F206	&EFS/E9.7	1	Fuse 250A	61-0201521
=C6-F207	&EFS/E9.8	1	Fuse 250A	61-0201521
=C6-F208	&EFS/E9.8	1	Fuse 250A	61-0201521
=C6-F209	&EFS/E9.9	1	Fuse 250A	61-0201521